Description

Hoval Belaria® twin A (17-32)
Hoval Belaria® twin AR (17-32)
Air/water heat pump

- Compact air/water heat pump for outside installation
- High energy efficiency
- Evaporator and refrigeration part are placed adjacent to one another. The refrigeration part is encapsulated with electrolytically galvanised, powder-coated and sound-insulated steel sheets. Colour light grey (RAL 7035).
- Covering made of ABS plastic. Colour blue grey (RAL 7031)
- Two suction gas cooled scroll compressors.
- With large-area, multi-row aluminium/copper ribbed pipe evaporator and copper-brazed plate-type condenser made from stainless steel.
- Two electronic expansion valves for the highest efficiency and operational reliability
- Speed-controlled axial ventilator made from high-strength composite material with vanes as a compact unit for low energy consumption and the lowest noise level
- Two electronic starting current limiters with rotary field/phase monitoring.
- Hydraulic connections with flexible hoses downwards.
- Control panel for wall installation inside the building with built-in TopTronic® T/UWP heating regulator
- Hoval Belaria® twin AR - additionally with cooling function through inversion of cycle
- Refrigerant 410A

Condensate connection
- The drain pipeline is to be made with sufficient incline and without change of the cross-section.
- The water connections and the drain pipelines must be carried out outdoors and must be protected against frost on site (see base plan).

Hydraulic connections
- Heating connections with flexible hoses to the bottom

Electrical connections
- Connection from the bottom (see base plan)

Electrical cabinet for wall installation inside the building and built-in TopTronic® T/UWP heating regulator.
Regulation function integrated for:
- 1 mixer circuit
- 1 heating circuit without mixer
- domestic hot water loading circuit

Function extension possibility via different key modules.

Options
Diffuser for sound reduction

Delivery
- One-piece construction
- Complete, packed

Recommended accessory
- Hoval circulation pump with continuously variable speed control, see Accessories

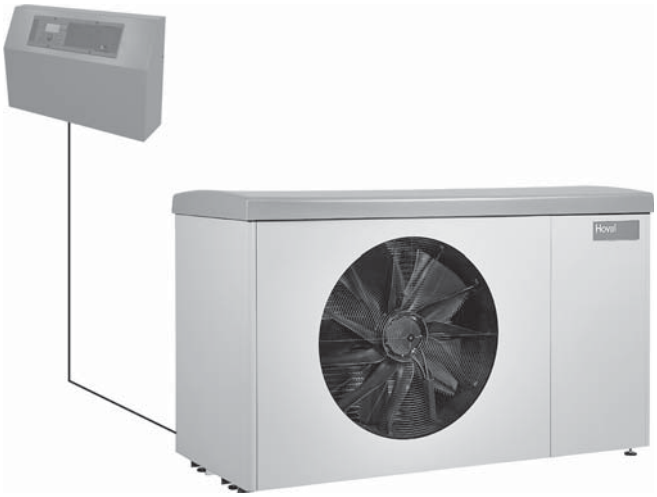

Hoval Belaria® twin A Type	Heat output with A2W35 kW	
	Stage 1	Stage 2
(17)	10.3	17.2
(24)	13.1	23.7
(32)	18.6	31.6

Hoval Belaria® twin AR Type	Heat output with A2W35 kW		Cooling capacity A35W7 kW	
	Stage 1	Stage 2	Stage 1	Stage 2
(17)	10.3	17.2	9.2	17.6
(24)	13.1	23.7	12.7	24.3
(32)	18.6	31.6	16.1	30.9

Authorisations
Switzerland/Germany/Austria

Hoval Belaria® twin A (24) test No. AIT-2.04.01092.1.0

The Belaria® twin A and Belaria® twin AR (17-32) series have been registered for certification with the Quality Seal Commission.

Part No.

Air/water heat pump - 2-stage — Part No.

Air/water heat pump for outside installation. Compact device internally wired ready-for-installation. Wall-mounted electrical cabinet with built-in TopTronic® T/UWP heating regulator.

Hoval Belaria® twin A type	Heat output A2W35 kW		
	Stage 1	Stage 2	
(17)	10.3	17.2	7012 571
(24)	13.1	23.7	7012 572
(32)	18.6	31.6	7012 573

Hoval Belaria® twin AR

Design as for Hoval Belaria® twin A, but with cooling function.

Hoval Belaria® twin AR type	Heat output A2W35 kW		Cooling capacity A35W7 kW		
	Stage 1	Stage 2	Stage 1	Stage 2	
(17)	10.3	17.2	9.2	17.6	7012 070
(24)	13.1	23.7	12.7	24.3	7012 071
(32)	18.6	31.6	16.1	30.9	7012 072

Accessories

Diffuser — 2056 705
for fan of Belaria® twin AR
for greater efficiency and lower noise

Recommended accessory:
Hoval circulation pump
see Accessories

Part No.

1-7

Accessories for heating regulation system TopTronic® T	Part No.

Key modules for Hoval TopTronic® T
for further functions additionally
to standard functions.
Key module consisting of:
function key for plugging into TopTronic® T
incl. accessories
Only one key module is possible!

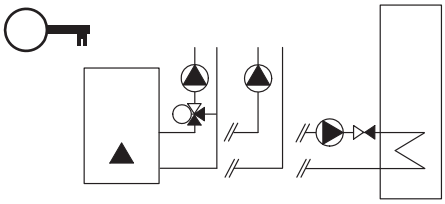

Standard functions
already included in TopTronic® T.
- 1 mixing circuit
- 1 heating circuit without mixing operation
- domestic hot water loading circuit

Functions of the key modules

Key module	2nd mixing circuit	solid-fuel storage tank bi-fuel	solar
1	●		
2		●	
3			●
4	●	●	
5	●		●
6		●	●
7	●	●	●

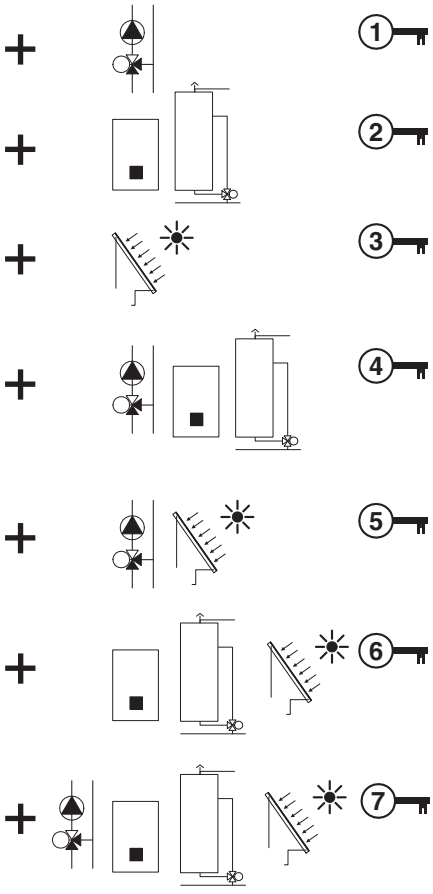

Key module 1 — 6012 154
for 2nd mixing circuit
Function 1, 1 flow sensor, 2 loose plugs

Key module 2 — 6012 155
for solid fuel/storage tank/bivalent installation
Function key 2, 3 immersion sensors, 4 loose plugs

Key module 3 — 6012 156
for solar plants
Function key 3, 1 collector sensor, 1 calorifier sensor, 4 loose plugs

Key module 4 — 6012 157
for 2nd mixing circuit and solid fuel/storage tank/ bivalent installation
Function key 4, 1 flow sensor, 3 immersion sensors, 6 loose plugs.

Key module 5 — 6012 158
for 2nd mixing circuit and solar plants
Function key 5, 1 flow sensor, 1 collector sensor, 1 calorifier sensor, 6 loose plugs

Key module 6 — 6012 159
for solid fuel/storage tank/bivalent installation and solar plants
Function key 6, 1 collector sensor, 4 immersion sensor, 6 loose plugs.

Key module 7 — 6012 160
for 2nd mixing circuit, solid fuel/storage tank/ bivalent installation and solar plants
Function key 7, 1 flow sensor, 1 collector sensor, 4 immersion sensors, 8 loose plugs

Sensor type
Immersion-/calorifier sensor : Type KVT20/5/6 (L = 5 m) without immersion sleeve
flow sensor Type VF204S with plug
Collector sensor Type PT1000 (silicone)

System solutions and applications
see Hoval CD

Part No.

	Accessories	Part No.
	**Room station RS-T** for TopTronic® T effective on one mixing circuit	2034 939
	**Remote control RFF-T** for TopTronic® T effective on one mixing circuit	2022 239
	**Outdoor sensor AF 200** (may be included in the heat generator scope of delivery) for one mixing circuit or for the mean value (per regulator 2 outdoor temperature sensors possible)	2022 995
	**Contact sensor VF202K** usable as flow or return sensor. with 2 m cable and plug	6012 595
	**Cable sensor KVT 20/5/6** with 5 m cable	2022 992
	**Protective pipe immersion sleeve SB280 ½"** brass nickel-plated PN10 - 280 mm	2018 837
	**Solar temperature sensor PT 1000** silicone sensor, can be used as collector/calorifier sensor L = 2.5 m max. permissible temperature 240 °C (included in key module Solar)	2022 990
	Collective alarm for Belaria® twin I, twin IR (15-30), Belaria® compact IR (7-11) to signal an alarm to the outside	6021 428

Part No.

Accessories	Part No.

Screw-in electrical heating inset
for plants with energy buffer storage tank as emergency heating. Control set must be ordered.

Type	Heat output kW	Installation depth mm	Part No.
EP-3	3.0	390	2022 216
EP-4,5	4.5	500	2022 217
EP-6	6.0	620	2022 218
EP-9	9.0	850	2022 219

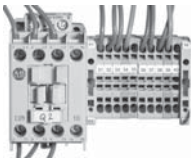

Control set (switching contactor) 6033 403
for installation in the supplied wall-hanging electrical cabinet.

Necessary for the control of an electrical heating inset.

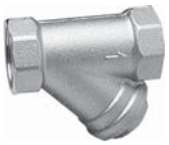

Silt trap
Casing made of brass, PN 16
Max. operating temperature 110 °C
Sieve made of stainless steel, size of mesh 0.5 mm

DN 25-1″	2046 978
DN 32-1¼″	2046 980
DN 40-1½″	2046 982
DN 50-2″	2046 984

Further silt traps
see separate brochure

Sludge separator with magnetic ring Dirtmag 25 - 1″ 2054 376
Casing, lid and interior elements made from HDPE plastic
Temperature range 0 - 90 °C
Max. operating pressure: 3 bar
Max. glycol fraction: 30%
manual air-bleeding

Circulating pumps, controlling elements, energy storage tank see separate brochures

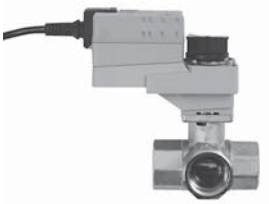

Motorised switch ball valve type R3..BL/LR230A, NR230A, SR230A
connections with inner thread
with drive

Type	DN	Screw connection	kvs[1]	Part No.
R3025-BL2/ LR230A	25	Rp 1″	10.0	6027 411
R3032-BL3/ NR230A	32	Rp 1¼″	15.0	6027 412
R3040-BL4/ SR230A	40	Rp 1½″	47.0	6027 413
R3050-BL4/ SR230A	50	Rp 2″	75.0	6027 414

[1] Through-flow quantity in m^3/h at 100% opening and with a pressure loss of 1 bar.

Part No.

Accessories	Part No.

Flow controller set
STW01-25 / STW01-40 / STW01-50
Consisting of:
flow controller VHS09 (paddle)
incl. solder nipple for installing the flow controller on pipeline, connection cable and sealing ring

Type	T-piece	Double nipple	
STW01-25	1″	1″	6031 123
STW01-40	1½″	1½″	6032 044
STW01-50	2″	2″	6033 043

For active cooling, the installation of a flow controller is mandatory!

Float ball flow switch — 2040 708
area of application 600 - 6000 l/h,
0-80 °C, nominal pressure 10 bar
connection Rp. 1½″
installed length 335 mm
bistable reed contact as
normally open contact

For active cooling, the installation of a flow controller is mandatory!

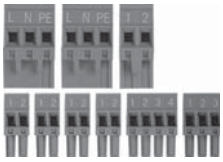

Expansion connector set — 6032 509
for the automatic heat pump ECR461.
Use for additional function:
- Flow monitor
- Crankcase bottom heating
- Condensation drain heating
- Heat quantity metering

Plugs:
- 1x 230V digital input
- 2x 230V outputs
- 4x low-voltage inputs
- 1x ratio. Input

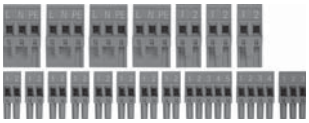

Universal connector set — 6032 510
for automatic heat pump ECR461
Plugs:
- 3x 230V digital input
- 4x 230V outputs
- 6x low-voltage inputs
- 2x low-voltage outputs
- 1x ratio. input
- 1x electr. expansion valve

Service

Commissioning

Commissioning by works service or Hoval trained authorised serviceman/company is condition for warranty.

For commissioning and other services please contact your Hoval sales office.

Technical data

Hoval Belaria® twin A (17-32)

Type		Belaria® twin A (17-32) (17) 1st stage	(17) 2nd stage	(24) 1st stage	(24) 2nd stage	(32) 1st stage	(32) 2nd stage
Heating for A2W35 according to EN 14511							
• Heat output	kW [1]	10.3	17.2	13.1	23.7	18.6	31.6
• Power consumption	kW [1]	2.2	4.2	2.9	5.8	4.1	7.9
• Coefficient of performance	COP	4.6	4.1	4.6	4.1	4.5	4.0
• Weight	kg	430		575		590	
• Dimensions		see Dimensions					
• Compressor type		2 x spiral-(scroll), hermetic					
• Refrigerant filling R410A	kg	12.8		15.7		16.0	
• Fan type		radial/speed-controlled					
Nominal air quantity	m^3/h	3500 - 7000		4500-9000		5500-11000	
• Expansion valve		2 x, electronically controlled					
• Evaporator		lamellar tube Alu/Cu					
• Condenser		copper brazed/stainless steel plate heat exchanger					
Heating flow and return flow	R	1 ¼″ (outer thread)		1 ½″ (outer thread)		1 ½″ (outer thread)	
• Heating water quantity 5k ΔT	dm^3/h	3750		5050		6600	
• Pressure loss heat pump	kPa	14.2		10.7		11.9	
• max. operating pressure heating side	bar	3					
• Ranges of application for heating and hot water		see diagrams					
Electrical data							
Voltage							
• Compressor	V	3 x 400					
• Fan	V	3 x 400					
Frequency	Hz	50					
Voltage range	V	380-420					
Current							
• Power consumption compressor A2/W35	kW	2.21	4.23	2.84	5.85	4.07	7.87
• Power consumption compressor A20/W55	kW	4.05	7.38	5.02	9.33	6.01	12.65
• Operating current compressor Imax.	A	6.54	13.08	8.46	16.92	12.00	24.00
• Operating current evaporator fan	A	-	1.45	-	1.45	-	1.45
• Starting current with jump start	A	26.49		34.16		45.95	
• Principal current (external protection)	A	20		25		32	
	type	C,D,K	C,D,K	C,D,K	C,D,K	C,D,K	C,D,K
• Control current (external protection)	A	13	13	13	13	13	13
	type	B,C,D,K,Z	B,C,D,K,Z	B,C,D,K,Z	B,C,D,K,Z	B,C,D,K,Z	B,C,D,K,Z

[1] kW = incl. defrosting loss

Technical data

Hoval Belaria® twin AR (17-32)

Type		Belaria® twin AR (17-32)					
		(17)		(24)		(32)	
		1st stage	2nd stage	1st stage	2nd stage	1st stage	2nd stage
Heating for A2W35 according to EN 14511							
• Heat output	kW [1]	10.3	17.2	13.1	23.7	18.6	31.6
• Power consumption	kW [1]	2.2	4.2	2.9	5.8	4.1	7.9
• Coefficient of performance	COP	4.6	4.1	4.6	4.1	4.5	4.0
Cooling A35W7							
• Cooling capacity	kW	9.2	17.6	12.7	24.3	16.2	30.9
• Power consumption	kW	2.7	6.0	3.7	8.0	4.9	10.8
• Coefficient of performance	EER	3.4	2.9	3.4	3.0	3.3	2.9
Cooling A35W18							
• Cooling capacity	kW	14.0	26.3	18.5	35.8	24.6	45.0
• Power consumption	kW	2.8	6.8	3.7	9.2	5.1	11.8
• Coefficient of performance	EER	4.9	3.9	4.9	3.9	4.8	3.8
• Weight	kg	430		575		590	
• Dimensions		see Dimensions					
• Compressor type		2 x spiral-(scroll), hermetic					
• Refrigerant filling R410A	kg	12.8		15.7		16.0	
• Fan type		radial/speed-controlled					
Nominal air quantity	m³/h	3500 - 7000		4500-9000		5500-11000	
• Expansion valve		2 x, electronically controlled					
• Evaporator		lamellar tube Alu/Cu					
• Condenser		copper brazed/stainless steel plate heat exchanger					
Heating flow and return flow	R	1 ¼″ (outer thread)		1 ½″ (outer thread)		1 ½″ (outer thread)	
• Heating water quantity 5k ΔT	dm³/h	3750		5050		6600	
• Pressure loss heat pump	kPa	14.2		10.7		11.9	
• max. operating pressure heating side	bar	3					
• Ranges of application for heating, hot water and cooling		see diagrams					
Electrical data							
Voltage							
• Compressor	V	3 x 400					
• Fan	V	3 x 400					
Frequency	Hz	50					
Voltage range	V	380-420					
Current							
• Power consumption compressor A2/W35	kW	2.21	4.23	2.84	5.85	4.07	7.87
• Power consumption compressor A20/W55	kW	4.05	7.38	5.02	9.33	6.01	12.65
• Operating current compressor Imax.	A	6.54	13.08	8.46	16.92	12.00	24.00
• Operating current evaporator fan	A	-	1.45	-	1.45	-	1.45
• Starting current with jump start	A	26.49		34.16		45.95	
• Principal current (external protection)	A	20		25		32	
	type	C,D,K	C,D,K	C,D,K	C,D,K	C,D,K	C,D,K
• Control current (external protection)	A	13	13	13	13	13	13
	type	B,C,D,K,Z	B,C,D,K,Z	B,C,D,K,Z	B,C,D,K,Z	B,C,D,K,Z	B,C,D,K,Z

[1] kW = incl. defrosting loss

A flow controller must be installed for operational reliability in cooling mode.

Technical data

Diagrams range of application

Belaria® twin A (17-32), Belaria® twin AR (17-32)
Heating and
hot water production

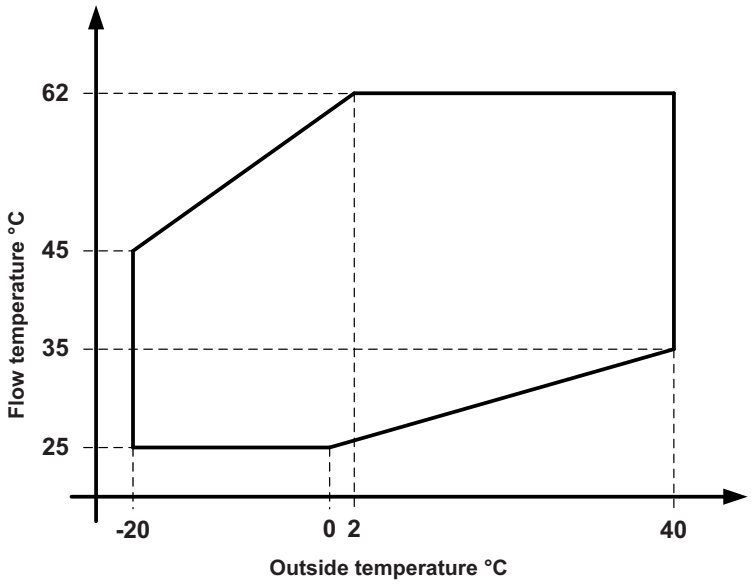

Belaria® twin AR (17-32)
Cooling

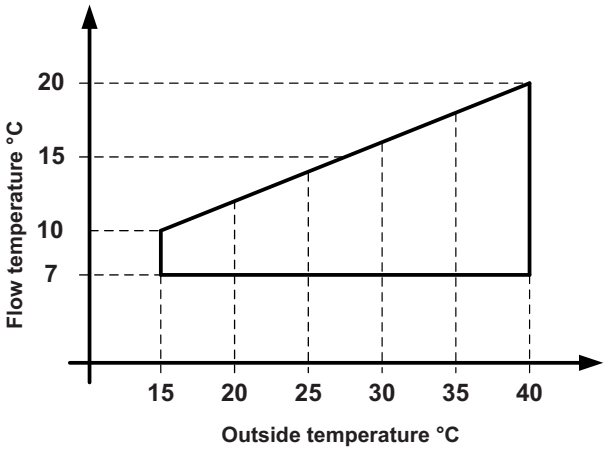

Technical data

Hoval Belaria® twin A (17-32)
Hoval Belaria® twin AR (17-32)

Sound pressure level - sound power level
The **sound pressure level** is dependent on the **place of measurement** in a sound field and describes the sound intensity at this place. The sound power level thus is a feature of the sound source and therefore is distance-unrelated; it describes the totality of sound power of the relevant source radiated into all directions.

Structure-borne sound
All connections must be fitted with compensators or vibration absorbers so that no structure-borne sound is being transmitted.

Special precautions must be taken for roof installation.

Heat pump with diffuser on the blow-out.
Entails a reduction of the sound power level of approx. 3 dB(A) depending on speed of rotation of ventilator.

Sound propagation
The further away you are from a sound source, the lower the acoustic energy, and consequently the immission values.
In general, not only the distance between the heat pump and the immission point should be considered with regard to propagation, but also, depending on the circumstances, the following factors:

- Installation location
  - free-standing (reference factor Q= 2)
  - on the facade (reference factor Q=4)
  - in the corner (reference factor Q=8)

- Effect of obstacles
- Reflection against buildings, trees or rocks
- Effect of reflections from the ground
- Attenuation by the air and the ground
- Effect of wind and temperature stratifications of the air

The table below contains reference values and only takes account of the distance and installation location.

Belaria® twin A, Belaria® twin AR Type	Operating mode	Control normal operation V	Sound pressure level outside dB (A)	Distance m	Sound pressure level free installation dB (A)	Sound pressure level on facade dB (A)
(17)	Normal mode	6.8	64.0	1	56.0	59.0
				5	42.0	45.0
	Whisper mode (1-stage)	5.3	56.0	1	48.0	51.0
				5	34.0	37.0
	Whisper mode (night reduction)	6.1	60.0	1	52.0	55.0
				5	38.0	41.0
(24)	Normal mode	7.1	67.0	1	59.0	62.0
				5	45.0	48.0
	Whisper mode (1-stage)	5.5	58.0	1	50.0	53.0
				5	36.0	39.0
	Whisper mode (night reduction)	6.3	63.0	1	55.0	58.0
				5	41.0	44.0
(32)	Normal mode	9.0	72.0	1	64.0	67.0
				5	50.0	53.0
	Whisper mode (1-stage)	7.1	64.0	1	56.0	59.0
				5	42.0	45.0
	Whisper mode (night reduction)	8.1	68.0	1	60.0	63.0
				5	46.0	49.0

Night-time reduction can result in a reduction in the COP by up to 0.2.

Technical data

Performance data

Indications according to EN 14511

Hoval Belaria® twin A, Belaria® twin AR

Type		(17) 1st stage			(17) 2nd stage			(24) 1st stage			(24) 2nd stage		
t_{VL} °C	t_A °C	Q_{WP} kW	P kW	COP	Q_{WP} kW	P kW	COP	Q_{WP} kW	P kW	COP	Q_{WP} kW	P kW	COP
	-20	5.66	2.21	2.56	9.52	4.23	2.25	6.81	2.70	2.52	12.31	5.56	2.21
	-15	6.92	2.23	3.10	11.63	4.26	2.73	8.61	2.78	3.10	15.57	5.72	2.72
	-10	7.79	2.24	3.48	13.10	4.28	3.06	9.87	2.83	3.49	17.85	5.83	3.06
	-7	8.67	2.25	3.85	14.58	4.31	3.39	11.13	2.88	3.86	20.13	5.94	3.39
	-2	9.46	2.23	4.24	15.91	4.27	3.73	12.11	2.86	4.23	21.91	5.90	3.72
35	2	10.26	2.21	4.64	17.24	4.23	4.08	13.09	2.84	4.62	23.68	5.85	4.05
	7	12.18	2.23	5.46	21.67	4.43	4.89	15.14	2.80	5.40	29.17	5.98	4.88
	10	13.63	2.32	5.88	24.25	4.61	5.26	16.52	2.84	5.81	31.83	6.07	5.24
	12	14.60	2.43	6.01	25.97	4.73	5.49	17.44	2.93	5.96	33.61	6.13	5.48
	15	16.53	2.64	6.26	27.94	4.91	5.69	19.28	3.10	6.22	35.50	6.22	5.71
	20	18.46	2.86	6.46	31.21	5.20	6.00	21.12	3.27	6.46	38.67	6.37	6.07
	-20	5.47	2.41	2.27	9.20	4.62	1.99	6.98	3.11	2.25	12.63	6.40	1.97
	-15	6.70	2.44	2.74	11.26	4.67	2.41	8.57	3.14	2.73	15.50	6.46	2.40
	-10	7.56	2.46	3.07	12.71	4.71	2.70	9.67	3.16	3.06	17.50	6.51	2.69
	-7	8.42	2.48	3.39	14.16	4.75	2.98	10.78	3.18	3.39	19.51	6.55	2.98
	-2	9.25	2.46	3.76	15.55	4.71	3.30	11.87	3.17	3.74	21.48	6.54	3.29
40	2	10.07	2.44	4.12	16.94	4.68	3.62	12.97	3.17	4.10	23.46	6.52	3.60
	7	11.83	2.44	4.85	21.05	4.84	4.35	14.83	3.10	4.78	28.58	6.62	4.32
	10	13.20	2.54	5.21	23.50	5.04	4.66	16.08	3.13	5.13	30.98	6.69	4.63
	12	14.12	2.65	5.32	25.13	5.17	4.86	16.91	3.22	5.25	32.59	6.74	4.83
	15	15.95	2.89	5.53	26.98	5.36	5.03	18.58	3.39	5.48	34.26	6.81	5.03
	20	17.79	3.12	5.70	30.06	5.68	5.29	20.25	3.56	5.68	37.06	6.93	5.34
	-20	5.28	2.61	2.02	8.87	5.00	1.77	7.16	3.51	2.04	12.95	7.24	1.79
	-15	6.48	2.65	2.44	10.90	5.08	2.15	8.52	3.50	2.44	15.42	7.21	2.14
	-10	7.33	2.68	2.73	12.32	5.13	2.40	9.48	3.49	2.72	17.15	7.18	2.39
	-7	8.17	2.71	3.01	13.73	5.19	2.65	10.44	3.48	3.00	18.88	7.16	2.64
	-2	9.03	2.69	3.35	15.18	5.16	2.95	11.64	3.48	3.34	21.06	7.18	2.93
45	2	9.89	2.68	3.69	16.63	5.13	3.25	12.84	3.49	3.68	23.23	7.19	3.23
	7	11.48	2.65	4.34	20.43	5.26	3.89	14.52	3.40	4.27	27.98	7.26	3.85
	10	12.78	2.75	4.65	22.74	5.47	4.16	15.64	3.42	4.57	30.14	7.31	4.12
	12	13.65	2.88	4.74	24.28	5.61	4.33	16.39	3.51	4.67	31.57	7.35	4.30
	15	15.38	3.13	4.91	26.02	5.82	4.47	17.88	3.68	4.86	33.17	7.40	4.48
	20	17.11	3.38	5.06	28.92	6.16	4.69	19.37	3.85	5.03	35.83	7.50	4.78
	-20	-	-	-	-	-	-	-	-	-	-	-	-
	-15	-	-	-	-	-	-	-	-	-	-	-	-
	-10	-	-	-	-	-	-	-	-	-	-	-	-
	-7	8.04	2.90	2.77	13.51	5.56	2.43	10.40	3.76	2.77	18.82	7.75	2.43
	-2	8.86	2.90	3.05	14.90	5.56	2.68	11.39	3.75	3.04	20.61	7.72	2.67
50	2	9.68	2.90	3.33	16.28	5.55	2.93	12.38	3.74	3.31	22.40	7.70	2.91
	7	11.31	2.93	3.85	20.13	5.83	3.45	13.99	3.69	3.79	26.95	7.89	3.42
	10	12.52	3.04	4.11	22.28	6.05	3.68	15.28	3.78	4.05	29.45	8.07	3.65
	12	13.33	3.18	4.19	23.72	6.19	3.83	16.15	3.91	4.13	31.11	8.19	3.80
	15	-	-	-	25.32	6.41	3.95	-	-	-	32.44	8.36	3.88
	20	16.56	3.72	4.45	27.99	6.77	4.13	18.74	4.44	4.22	34.67	8.66	4.00
	-20	-	-	-	-	-	-	-	-	-	-	-	-
	-15	-	-	-	-	-	-	-	-	-	-	-	-
	-10	-	-	-	-	-	-	-	-	-	-	-	-
	-7	7.91	3.10	2.55	13.30	5.93	2.24	10.36	4.04	2.56	18.75	8.33	2.25
	-2	8.69	3.11	2.79	14.61	5.96	2.45	11.14	4.01	2.78	20.16	8.27	2.44
55	2	9.47	3.13	3.03	15.92	5.98	2.66	11.92	3.98	2.99	21.57	8.20	2.63
	7	11.14	3.22	3.46	19.82	6.41	3.09	13.45	3.99	3.37	25.92	8.52	3.04
	10	12.26	3.34	3.67	21.82	6.63	3.29	14.93	4.13	3.61	28.76	8.82	3.26
	12	13.01	3.48	3.74	23.15	6.78	3.41	15.91	4.31	3.69	30.65	9.02	3.40
	15	-	-	-	24.61	7.01	3.51	-	-	-	31.72	9.14	3.47
	20	16.00	4.05	3.95	27.05	7.38	3.67	19.83	5.02	3.95	33.51	9.33	3.59
	-20	-	-	-	-	-	-	-	-	-	-	-	-
	-15	-	-	-	-	-	-	-	-	-	-	-	-
	-10	-	-	-	-	-	-	-	-	-	-	-	-
	-7	-	-	-	-	-	-	-	-	-	-	-	-
	-2	-	-	-	-	-	-	-	-	-	-	-	-
60	2	9.20	3.71	2.48	15.46	7.09	2.18	11.32	4.67	2.43	20.49	9.62	2.13
	7	10.92	3.82	2.86	19.43	7.59	2.56	12.97	4.66	2.78	24.98	9.95	2.51
	10	11.93	3.90	3.06	21.22	7.75	2.74	14.41	4.81	2.99	27.76	10.28	2.70
	12	12.60	4.03	3.13	22.42	7.85	2.86	15.37	5.02	3.06	29.61	10.50	2.82
	15	13.94	4.29	3.25	23.70	8.01	2.96	17.16	5.42	3.17	30.51	10.62	2.87
	20	15.29	4.55	3.36	25.84	8.27	3.13	18.94	5.82	3.26	32.01	10.81	2.96

t_{VL} = heating flow temperature (°C)
t_A = outside temperature (°C)
Q_{WP} = heat output including defrosting losses (kW)
P = power consumption of the whole device (kW)
COP = performance of the whole device (Δ t 5 K according to EN 14511)

Take account of daily power cuts!
see Engineering

Technical data

Performance data

Indications according to EN 14511

Hoval Belaria® twin A, Belaria® twin AR

Type		(32) 1st stage			(32) 2nd stage		
t_{VL} °C	t_A °C	Q_{WP} kW	P kW	COP	Q_{WP} kW	P kW	COP
	-20	10.59	4.14	2.56	18.02	8.00	2.25
	-15	12.76	4.14	3.08	21.71	8.01	2.71
	-10	14.28	4.14	3.45	24.30	8.02	3.03
	-7	15.80	4.15	3.81	26.88	8.02	3.35
	-2	17.18	4.11	4.18	29.22	7.95	3.68
35	2	18.55	4.07	4.56	31.56	7.87	4.01
	7	20.52	3.88	5.29	38.51	7.99	4.82
	10	21.96	3.86	5.69	42.05	8.12	5.18
	12	22.73	3.90	5.83	44.41	8.20	5.41
	15	24.01	3.93	6.11	46.94	8.33	5.63
	20	25.29	3.95	6.40	51.16	8.55	5.99
	-20	10.11	4.57	2.21	17.21	8.85	1.94
	-15	12.29	4.54	2.70	20.90	8.79	2.38
	-10	13.81	4.52	3.05	23.49	8.75	2.68
	-7	15.33	4.50	3.40	26.07	8.71	2.99
	-2	16.85	4.48	3.76	28.67	8.68	3.30
40	2	18.38	4.47	4.11	31.27	8.64	3.62
	7	19.93	4.25	4.69	37.40	8.76	4.27
	10	21.26	4.23	5.03	40.71	8.88	4.58
	12	21.96	4.27	5.15	42.92	8.97	4.79
	15	23.24	4.32	5.39	45.26	9.09	4.98
	20	24.52	4.36	5.62	49.15	9.30	5.28
	-20	9.64	5.01	1.92	16.39	9.69	1.69
	-15	11.81	4.95	2.39	20.09	9.57	2.10
	-10	13.33	4.90	2.72	22.68	9.48	2.39
	-7	14.85	4.86	3.06	25.27	9.39	2.69
	-2	16.53	4.86	3.40	28.12	9.40	2.99
45	2	18.20	4.87	3.74	30.97	9.41	3.29
	7	19.34	4.63	4.18	36.30	9.53	3.81
	10	20.56	4.59	4.48	39.38	9.65	4.08
	12	21.20	4.63	4.58	41.43	9.73	4.26
	15	22.48	4.70	4.78	43.67	9.86	4.43
	20	23.75	4.78	4.97	47.40	10.06	4.71
	-20	-	-	-	-	-	-
	-15	-	-	-	-	-	-
	-10	-	-	-	-	-	-
	-7	14.55	5.30	2.74	24.75	10.25	2.41
	-2	16.24	5.36	3.03	27.62	10.37	2.66
50	2	17.93	5.42	3.31	30.50	10.48	2.91
	7	19.20	5.23	3.67	36.04	10.77	3.35
	10	20.31	5.19	3.92	38.89	10.90	3.57
	12	20.88	5.23	3.99	40.80	10.99	3.71
	15				42.70	11.13	3.84
	20	23.15	5.39	4.29	45.87	11.36	4.04
	-20	-	-	-	-	-	-
	-15	-	-	-	-	-	-
	-10	-	-	-	-	-	-
	-7	14.25	5.75	2.48	24.24	11.12	2.18
	-2	15.95	5.86	2.72	27.13	11.33	2.39
55	2	17.65	5.97	2.96	30.02	11.55	2.60
	7	19.07	5.83	3.27	35.78	12.01	2.98
	10	20.06	5.78	3.47	38.41	12.16	3.16
	12	20.56	5.83	3.53	40.17	12.25	3.28
	15	-	-	-	41.73	12.40	3.36
	20	22.54	6.01	3.75	44.34	12.65	3.50
	-20	-	-	-	-	-	-
	-15	-	-	-	-	-	-
	-10	-	-	-	-	-	-
	-7	-	-	-	-	-	-
	-2	-	-	-	-	-	-
60	2	17.28	7.31	2.37	29.40	14.14	2.08
	7	18.89	7.05	2.68	35.44	14.53	2.44
	10	19.84	6.90	2.88	37.98	14.50	2.62
	12	20.31	6.89	2.95	39.68	14.48	2.74
	15	21.25	6.86	3.10	40.68	14.45	2.82
	20	22.19	6.84	3.24	42.36	14.41	2.94

t_{VL} = heating flow temperature (°C)
t_A = outside temperature (°C)
Q_{WP} = heat output including defrosting losses (kW)
P = power consumption of the whole device (kW)
COP = performance of the whole device (Δ t 5 K according to EN 14511)

Take account of daily power cuts!
see Engineering

Dimensions

Hoval Belaria® twin A (17), Belaria® twin AR (17)
(Dimensions in mm)

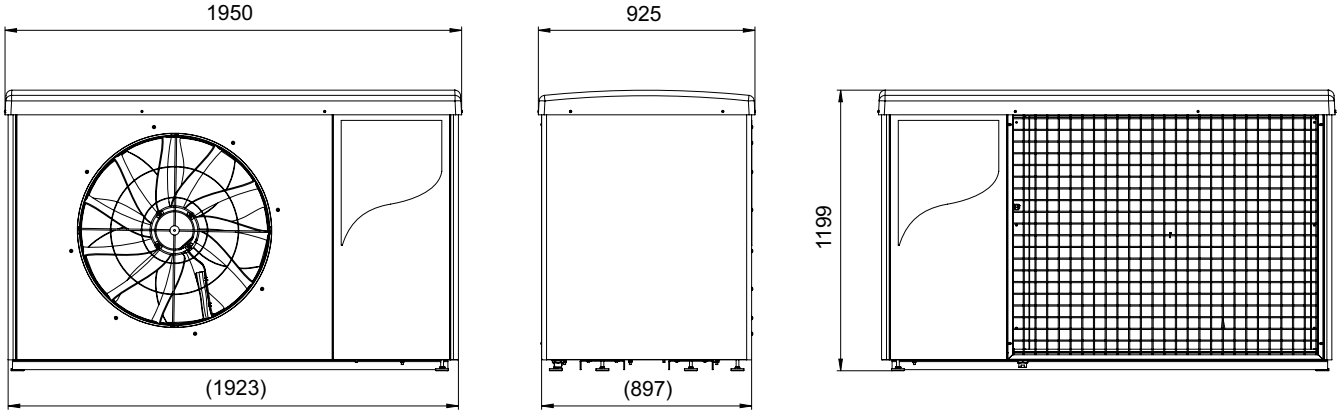

Hoval Belaria® twin A (24,32), Belaria® twin AR (24,32)
(Dimensions in mm)

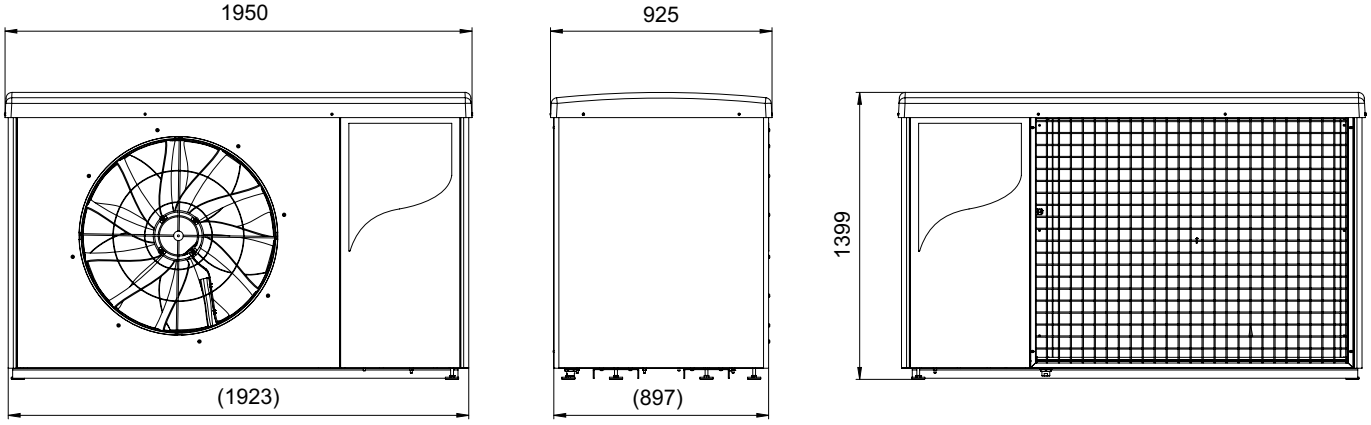

Space requirement for Hoval Belaria® twin A (17-32), Belaria® twin AR (17-32)
(Dimensions in mm)

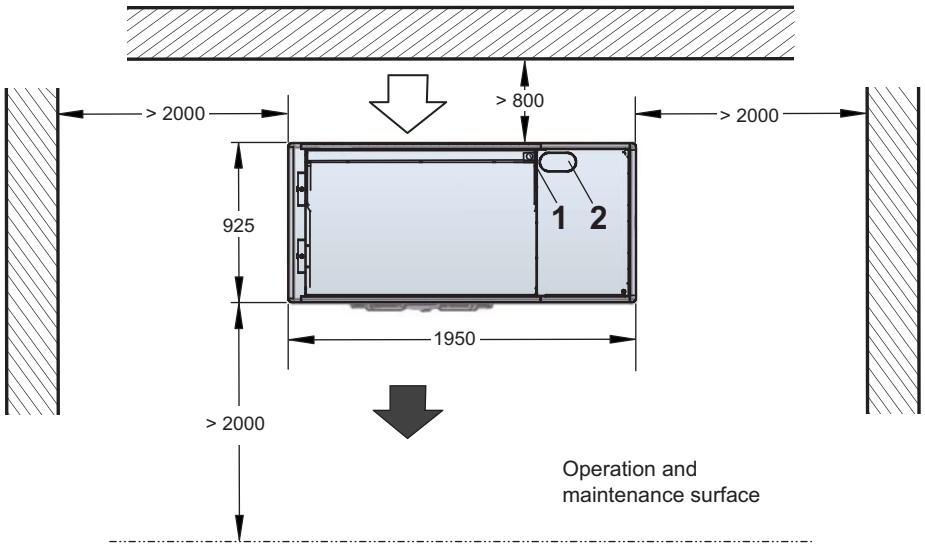

1 Condensate drain with electric trace heating
2 Hydraulic and electrical connection

Dimensions

Base plan Hoval Belaria® twin A (17-32), Belaria® twin AR (17-32)

(Dimensions in mm)

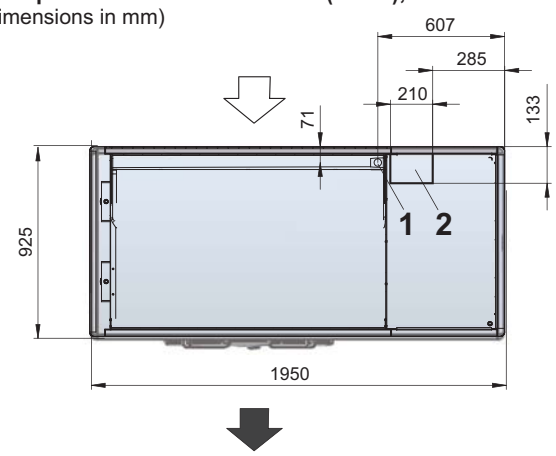

1 Condensate drain with electric trace heating
2 Hydraulic and electrical connection

The condensate drain is located on the rear (suction side).

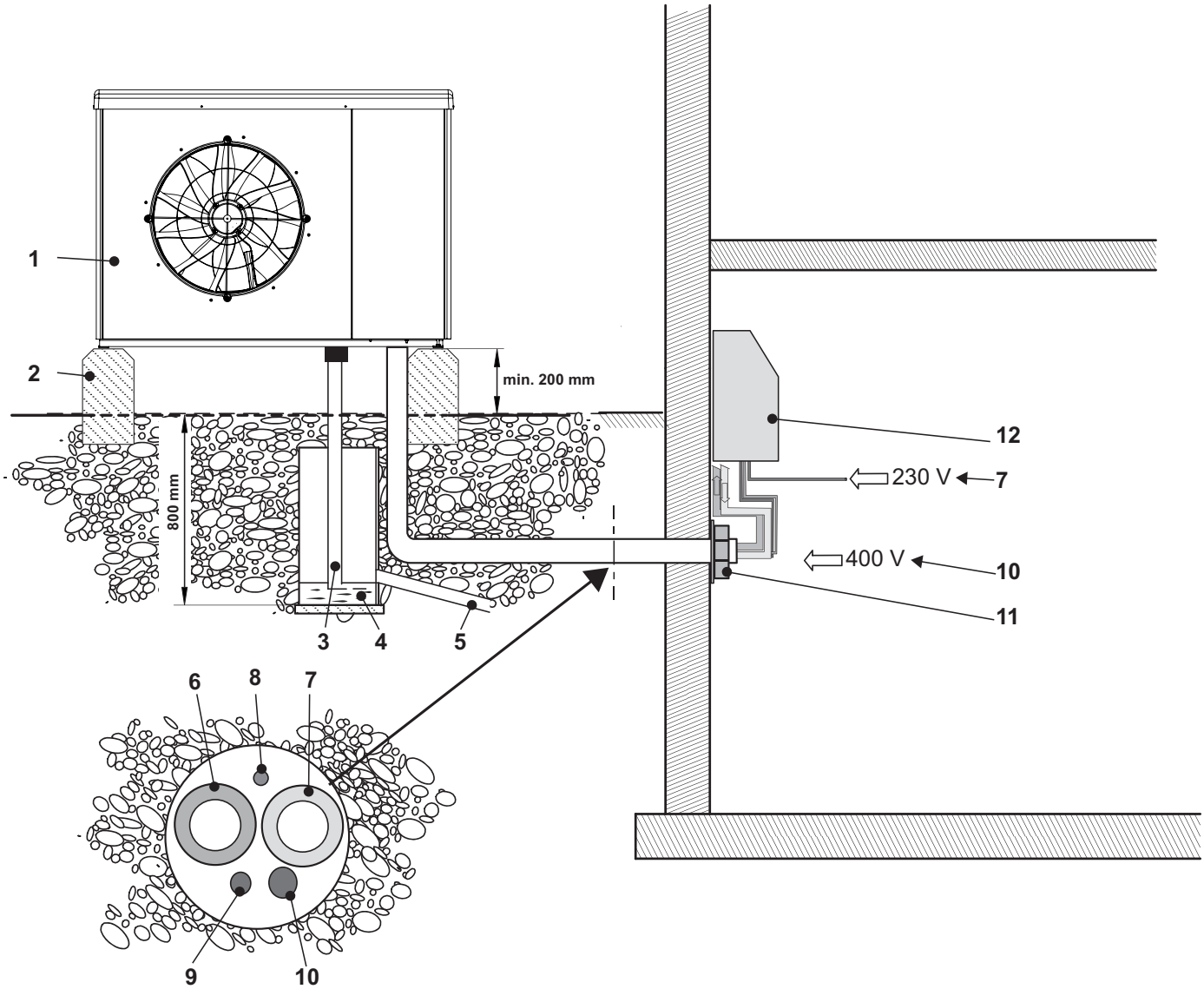

1 Belaria® twin A (17-32) / Belaria® twin AR (17-32)
2 Concrete base
3 Condensate drain with electric trace heating
4 Possible variant with shaft
5 Discharge into the sewage system
6 Heating flow (17) R 1¼″ / (24,32) R 1½″
7 Heating return (17) R 1¼″ / (24,32) R 1½″
8 Bus/controller cable
9 Electrical connecting pipe / 230 V
10 Electrical connecting pipe / 400 V
11 Wall lead-through
12 Electrical cabinet/controller (included in the scope of delivery)

Dimensions

Electrical cabinet for Hoval Belaria® twin A (17-32), Belaria® twin AR (17-32)
(Dimensions in mm)