# Technical information
# Assembly instructions

Hoval

## UltraSol, UltraSol eco

Flat-panel collector, surface-mounted installation, roof bar, parallel vertical

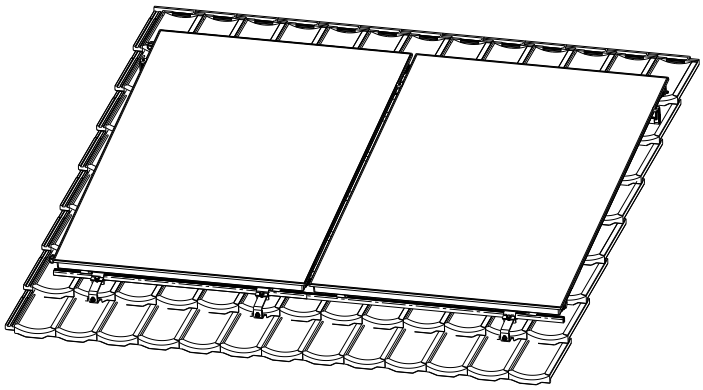

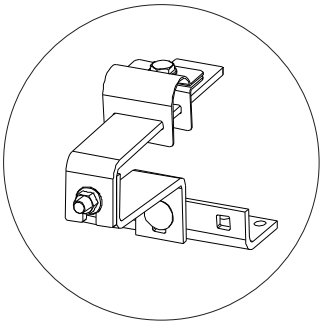

**This manual is valid for the following types:**

| | |
|---|---|
| 1-UltraSol | vertical |
| 1-UltraSol eco | vertical |

Hoval products must be installed and commissioned by specialists. This manual is intended for **specialists**. Electrical installation must be performed by a licensed electrician.

UltraSol® solar collectors are suitable and approved for generating warm or hot water. They comply with the requirements of the European standard for thermal solar collectors EN 12975-1 and EN 12975- 2. The solar collectors are TÜV-tested and are only allowed to be operated in closed circuits.

# 1. Installation instructions

## 1.1 Statics

Installation is only permissible on roof areas or substructures of sufficient load-bearing capacity. It is essential for the static load-bearing capacity of the roof or the substructure to be checked by the local statics engineer before the collectors are installed.

Particular attention must be paid to the quality of the wood in the substructure with regard to the durability of the screw connections for attaching collector installation fixtures.

The examination of the entire collector structure acc. to DIN 1055 parts 4 and 5 by the local statics engineer is required in particular in areas subject to high snowfall or high wind speeds. Attention in this must be paid to all special features of the installation site (Föhn wind, venturi effects, eddy formation, etc.) that can lead to increased load.

**Note on pitched roofs:**
Installing a collector field represents an intervention into an (existing) roof. Roofing materials such as roof tiles, shingles and slates, converted and inhabited lofts or roof pitches less than the minimum angle, require additional measures on site (with regard to the roofing), e.g. sarking felt, to protect against penetration of water due to wind pressure and blown snow.

The roofer must be consulted in order to devise a special solution (e.g. metal roof tiles) to prevent excessive load on the roof covering or the roof connection (in the case of hanger bolts and roof bars). When selecting the installation site, make sure that the maximum permitted loads are not exceeded either by snow or wind forces.

Collector fields must always be installed so that the snow is able to slip off the collectors freely. Any possible build-up of snow due to snow guards (or because of special installation situations) is not allowed to reach the collectors. Snow guards must be installed at a distance of 0.5 m above the top edge of the collector, to avoid the collector functioning as a snow guard.

To avoid impermissible wind suction loads, collectors must not be installed near the edges of the roof (acc. to EN 1991, minimum distance 1 m, however). Above all when elevators are used, the upper edge of the collector must not project beyond the ridge of the roof. Collectors must not be installed under a height change, in order to avoid increased loads due to windblown or slipping snow from the higher section of the roof onto the collector system. If snow guards are mounted on the more elevated roof for this reason, the statics of this roof must be inspected.

## 1.2 Connections

Collectors must be connected together using hydraulic plug-in connections. To facilitate plugging together, it is necessary to lubricate the external double seals using the silicone grease supplied before installation. Never use other installation auxiliaries or lubricants, however.

Use only the silicone grease supplied. Prior to use, all connection components must be kept in their original packaging and protected against damage. If the sealing rings/connectors are damaged or contaminated, they must not be used.

## 1.3 Collector

The UltraSol flat-panel collector is equipped with high-quality solar glass with an anti-reflective surface. We recommend that you wear gloves during installation to avoid soiling the glass.

## 2. Material overview

### 2.1 UltraSol, UltraSol eco flat collector

| Pos. | Designation | Number of collectors per row | | | | | | | | | | | |
|---|---|---|---|---|---|---|---|---|---|---|---|---|---|
| | | 1 | 2 | 3 | 4 | 5 | 6 | 7 | 8 | 9 | 10 | 11 | 12 |
| | Flat-panel collector | | | | | | | | | | | | |
| A | Dummy plug with integrated manual vent | 1 | 1 | 1 | 1 | 1 | 1 | 1 | 1 | 1 | 1 | 1 | 1 |
| B | Dummy plug | 1 | 1 | 1 | 1 | 1 | 1 | 1 | 1 | 1 | 1 | 1 | 1 |
| C | Fitting 90° cpl. DN16 with immersion sleeve | 1 | 1 | 1 | 1 | 1 | 1 | 1 | 1 | 1 | 1 | 1 | 1 |
| D | Fitting 90° cpl. DN16 | 1 | 1 | 1 | 1 | 1 | 1 | 1 | 1 | 1 | 1 | 1 | 1 |
| E | Hydraulic connector | - | 2 | 4 | 6 | 8 | 10 | 12 | 14 | 16 | 18 | 20 | 22 |
| F | Spring clip | 4 | 8 | 12 | 16 | 20 | 24 | 28 | 32 | 36 | 40 | 44 | 48 |
| G | Plug connection for holder tube section (with longer collector fields) | - | - | 2 | 2 | 4 | 4 | 6 | 6 | 8 | 8 | 10 | 10 |
| H | Collector end clamping element (left, right) | 2 | 2 | 2 | 2 | 2 | 2 | 2 | 2 | 2 | 2 | 2 | 2 |
| I | Short holder tube section | 2 | | 2 | | 2 | | 2 | | 2 | | 2 | |
| | Long holder tube section | | 2 | 2 | 4 | 4 | 6 | 6 | 8 | 8 | 10 | 10 | 12 |
| J | Roof bar | 4 | 4 | 6 | 8 | 10 | 12 | 12 | 14 | 16 | 18 | 18 | 20 |
| K | Hexagon socket screw | 2 | 4 | 6 | 8 | 10 | 12 | 14 | 16 | 18 | 20 | 22 | 24 |
| L | Locking pin | 2 | 4 | 6 | 8 | 10 | 12 | 14 | 16 | 18 | 20 | 22 | 24 |
| M | Middle clamping element (if more than 1 coll.) | - | 1 | 2 | 3 | 4 | 5 | 6 | 7 | 8 | 9 | 10 | 11 |
| O | Support tubes for elevation | | | | | | | | | | | | |
| X | Silicone grease type 2 (3 g) | 1 | 2 | 3 | 4 | 5 | 6 | 7 | 8 | 9 | 10 | 11 | 12 |

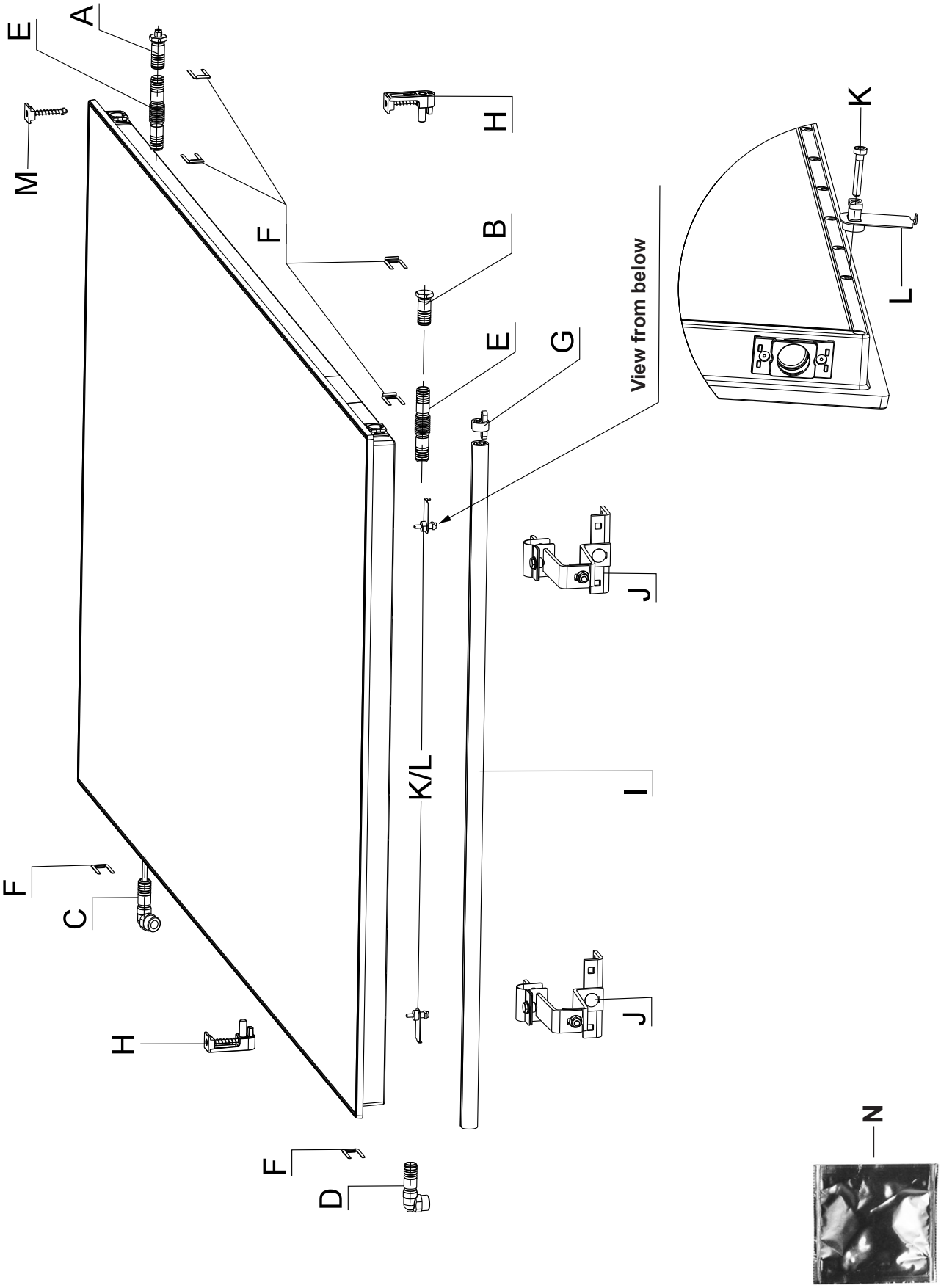


Material overview 1 collector

## 2.2 Recommendation for attachment points with roof brackets

**If the specified max. roof overhang B cannot be maintained because of the roof structure, increase the number of attachment points (roof bars). Ensure that the building offers a corresponding substructure, e.g. by using additional rafters.**

**Make sure that the roof laths in the areas of the collectors are firmly bolted onto the substructure!**

### 2.2.1 Standard load

| **Collectors** | **1** | **2** | **3** | **4** | **5** | **6** | **7** | **8** | **9** | **10** | **11** | **12** |
|---|---|---|---|---|---|---|---|---|---|---|---|---|
| Support level | 2 | 2 | 3 | 4 | 5 | 6 | 6 | 7 | 8 | 9 | 9 | 10 |
| Roof bar | 4 | 4 | 6 | 8 | 10 | 12 | 12 | 14 | 16 | 18 | 18 | 20 |
| Short holding tube profiles | 2 | | 2 | | 2 | | 2 | | 2 | | 2 | |
| Long holder tube sections | | 2 | 2 | 4 | 4 | 6 | 6 | 8 | 8 | 10 | 10 | 12 |
| Support tubes f. elevation | | | | | | | | | | | | |
| A | 1370 … 1850 | | | | | | | | | | | |
| B max. | 450 | | | | | | | | | | | |
| C | 1230 | 2475 | 3720 | 4965 | 6210 | 7455 | 8700 | 9945 | 11190 | 12435 | 13680 | 14925 |
| D1 max. | 800 | 1600 | 1600 | 1600 | 1600 | 1600 | 1600 | 1600 | 1600 | 1600 | 1600 | 1600 |
| D2 max. | | | 1600 | 1600 | 800 | 800 | 1600 | 1600 | 800 | 800 | 1600 | 1600 |
| D3 … D10 max. | | | | 1600 | 1600 | 1600 | 1600 | 1600 | 1600 | 1600 | 1600 | 1600 |

**Example:**
**3 collectors = 6 roof bars**

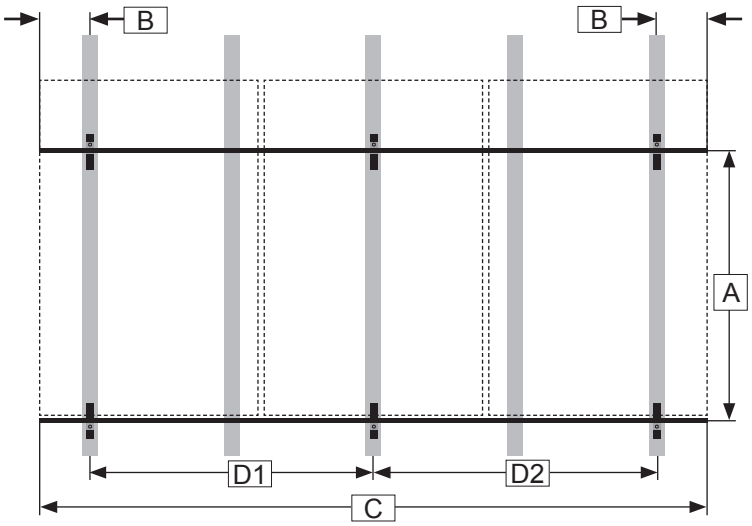


Roof bar

A Min./max. distance between the lower and upper holder tube section

B Max. distance from 1st attachment level to edge of collector field

C Overall length of collector panel

D Distance between attachment levels

**Standard load:**
**Attachments and collectors are configured for a maximum characteristic snow load of 2.0 kN/m² and a wind load of 0.8 kN/m². Definition of the static loads acc. to EN 1991.**

**Increased load:**
**see next page!**

## 2.2.2 Increased load

| Collectors | 1 | 2 | 3 | 4 | 5 | 6 | 7 | 8 | 9 | 10 | 11 | 12 |
|---|---|---|---|---|---|---|---|---|---|---|---|---|
| Support level | 2 | 3 | 5 | 7 | 8 | 10 | 11 | 13 | 14 | 16 | 17 | 19 |
| Roof bar | 4 | 6 | 10 | 14 | 16 | 20 | 22 | 26 | 28 | 32 | 34 | 38 |
| Short holding tube profiles | 2 | | 2 | | 2 | | 2 | | 2 | | 2 | |
| Long holder tube sections | | 2 | 2 | 4 | 4 | 6 | 6 | 8 | 8 | 10 | 10 | 12 |
| Support tubes f. elevation | | | | | | | | | | | | |
| A | 1370 … 1850 | | | | | | | | | | | |
| B max. | 450 | | | | | | | | | | | |
| C | 1230 | 2475 | 3720 | 4965 | 6210 | 7455 | 8700 | 9945 | 11190 | 12435 | 13680 | 14925 |
| D1 max. | 800 | 800 | 800 | 800 | 800 | 800 | 800 | 800 | 800 | 800 | 800 | 800 |
| D2 max. | | 800 | 800 | 800 | 800 | 800 | 800 | 800 | 800 | 800 | 800 | 800 |
| D3 … D18 max. | | | 800 | 800 | 800 | 800 | 800 | 800 | 800 | 800 | 800 | 800 |

**Example:**
**3 collectors = 10 roof bars**

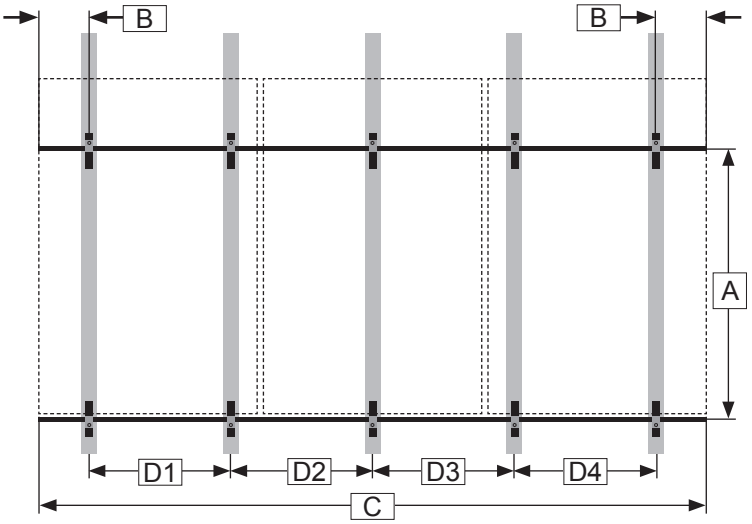


**Increased load:**
**Attachments and collectors are configured for a maximum characteristic snow load of 3.7 kN/m² and a wind load of 1.1 kN/m². Definition of the static loads acc. to EN 1991.**

## 2.3 Space requirements

Dimensions

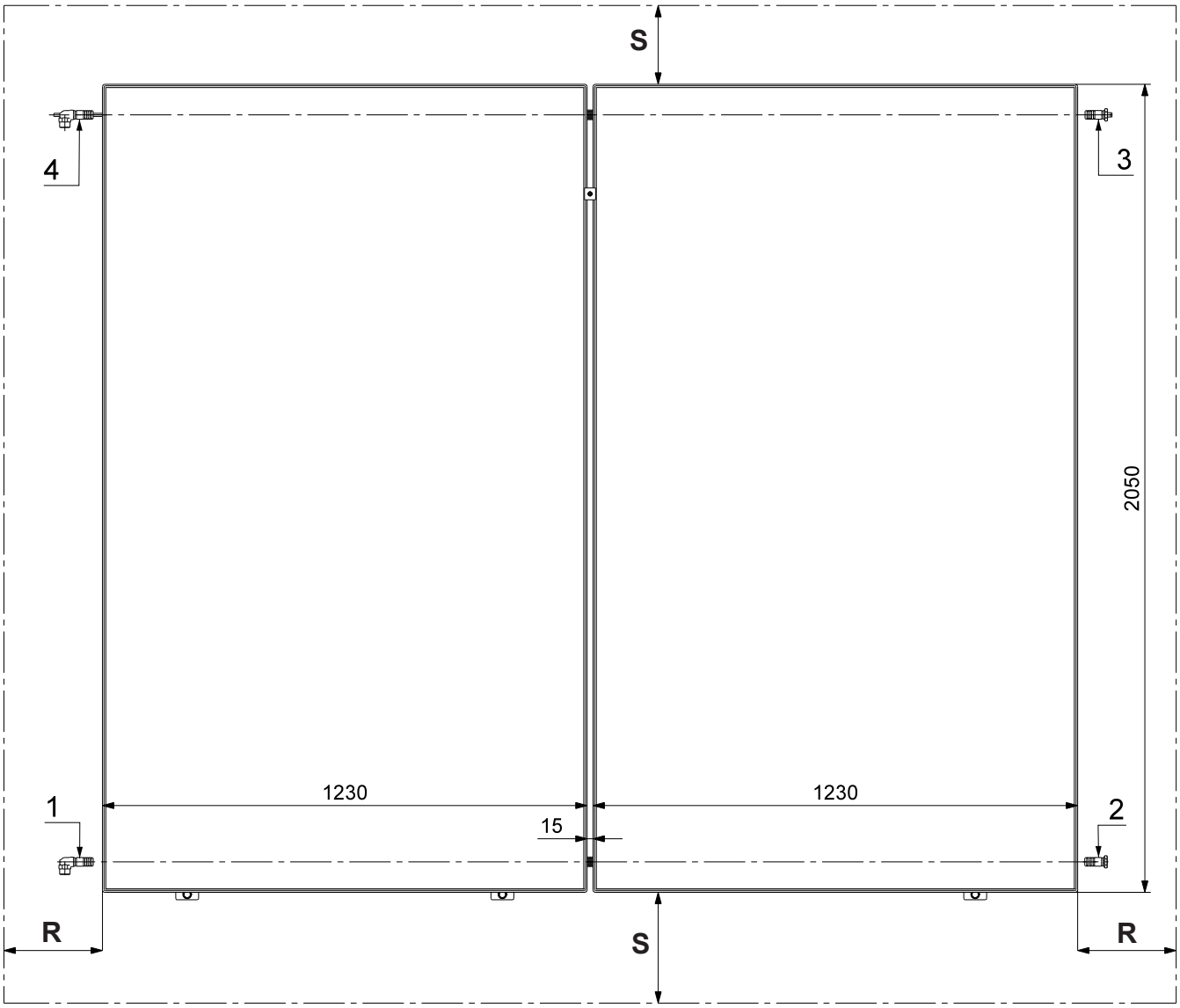


1 Line to the collector field (collector return) ¾"
2 Dummy plug ¾"
3 Dummy plug with integrated manual vent ¾"
4 Line from collector field (collector flow, warm)
Select short line routing ¾"

| | |
|---|---|
| R | 250 mm with built-in units, surface-mounted units (e.g. chimney, gable,...) |
| S top | At least one tile length distance from the gable! |
| S bottom | At least one tile length distance from the end of the roof (eaves).<br>Also comply with local regulations relating to snow safety (number of snow holders). |

## 2.4 Positioning the collector panel

**Minimum distances from the roof edges:**
Minimum distance of the collector panel (X) from the edge of the roof 1000 mm.
(Exception: eaves area with sloping roofs)

**If a lightning protection system is fitted:**
Minimum distance from lightning protection devices: Comply with the local regulations in this case; if necessary, consult an expert.

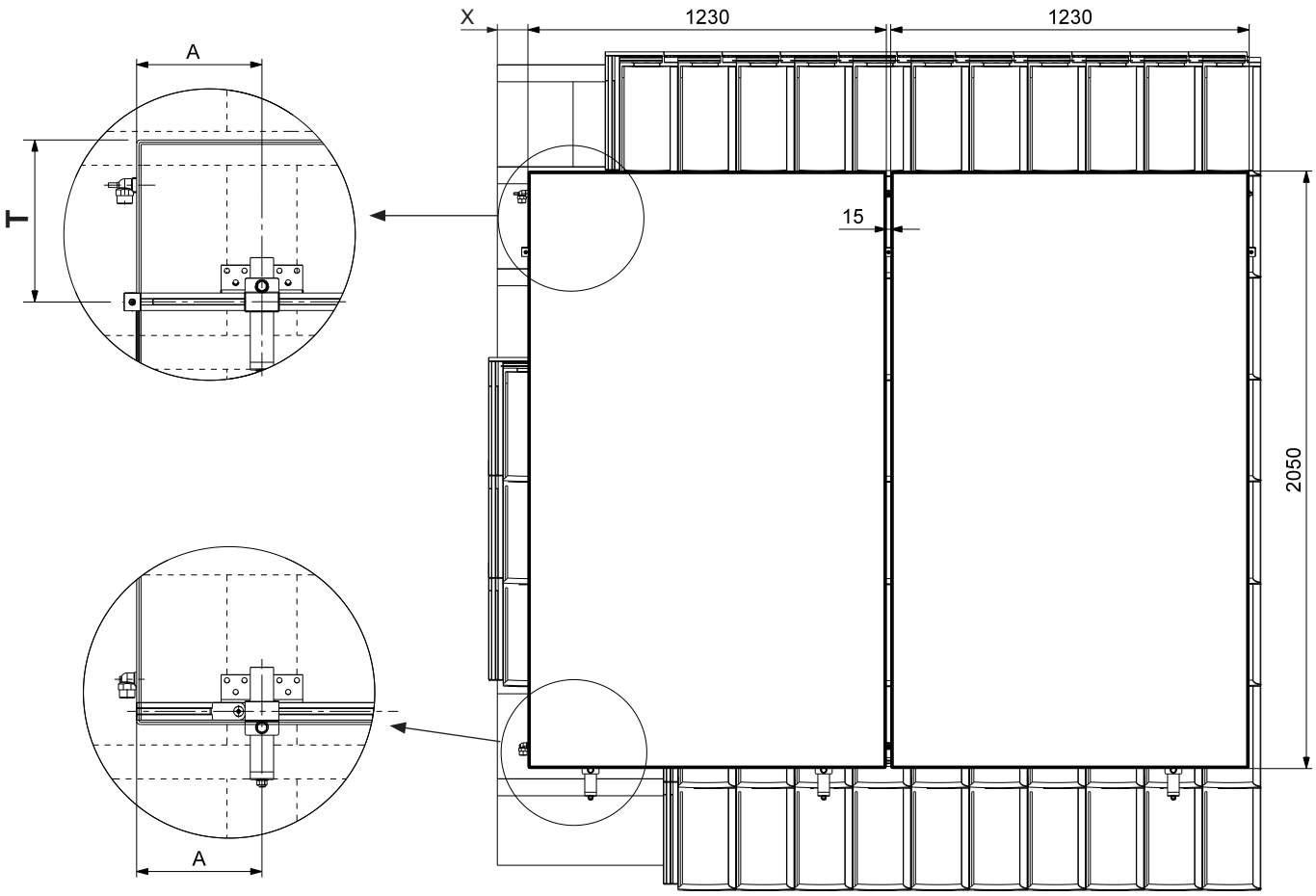


B Max. 450

T min. 200 mm
max. 680 mm

X Min. 1000 mm (comply with local regulations)

**For further information on spacing, see the Point 2.2 «Recommended roof bars» and structural requirements!**

## 3. Preparing the roof for the roof bar

1. Remove roof tiles in the locations where roof bars are to be attached.
   - Observe Points 2.4 and 3.3 when defining the spacing of the roof bars.

### 3.1 Mounting the roof bar on the rafters

Roof bar for tiled roofs (Frankfurt pan tiles, slidable tiles)

**Upper roof bar**

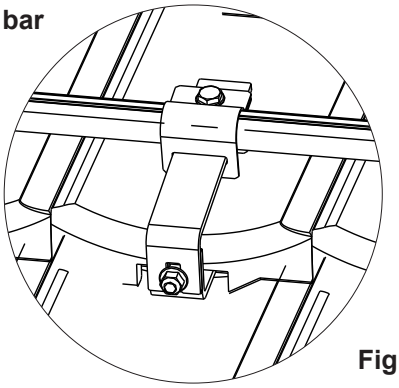

**Figure 01**

**Lower roof bar**

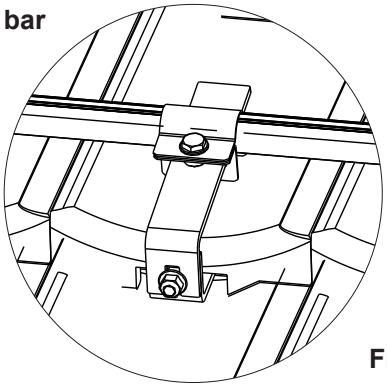

**Figure 02**

**Installation steps**

2. Mount the base bracket (1, Figure 03) of the roof bar on the rafter (2) and align it parallel to the roof lath.
3. Fit the **bottom** bracket hook (3, Figure 03).
   - Using the carriage bolt (4), adjust the height of the bottom bracket hook so that there is still some play between the tile and the bracket hook.
   - Insert the tile, cutting to size if necessary.
4. Insert the **top** bracket hook (5, Figure 03) into the carriage bolt (4) of the **bottom** bracket hook (3).
   - Align the bracket hook parallel to the roof lath. Distance between **top edge of rafter** (2) and **top edge of bracket hook** (5) 120 mm.
     *There should then be approx. 10 mm of play between roof tile and the holder tube section! Each roof bar must lie in the trough of the tile (Frankfurt pan tile, slidable tile)!*
   - Tighten the carriage bolt (6)

**! The «top bracket hook» must not be adjusted by more than 22 mm in upward direction (5, Figure 04)!**

**Top: Alignment clip (7, Figure 03) roof bar**

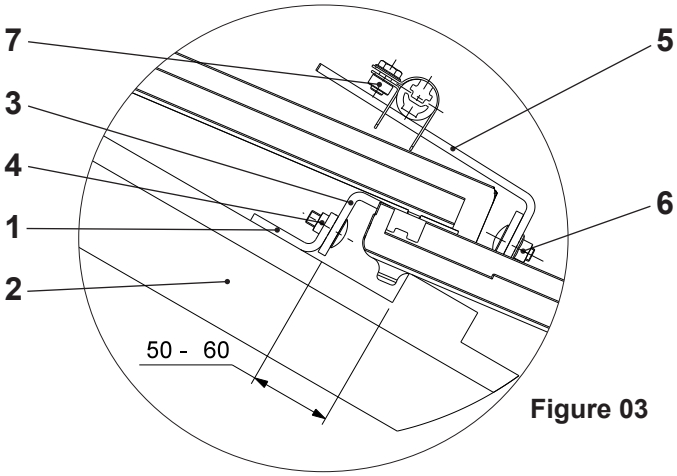


**Figure 03**

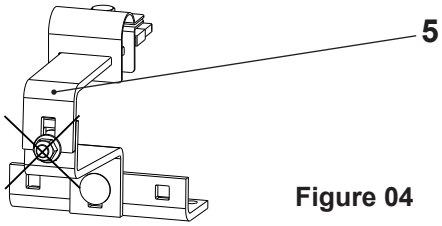


**Figure 04**

**Bottom: Alignment clip (7, Figure 05) roof bar**

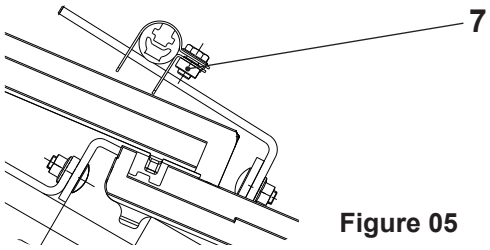


**Figure 05**

For details of the roof bar adjustment dimensions, see Point 3.2 on the next page!

## 3.2 Roof bar adjustment dimensions

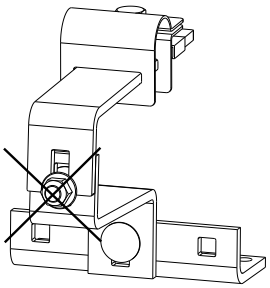

**Max. roof bar adjustment dimensions**

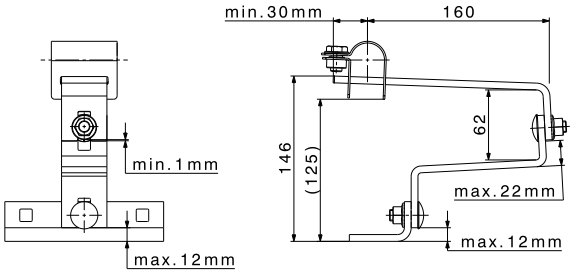


**Min. roof bar adjustment dimensions**

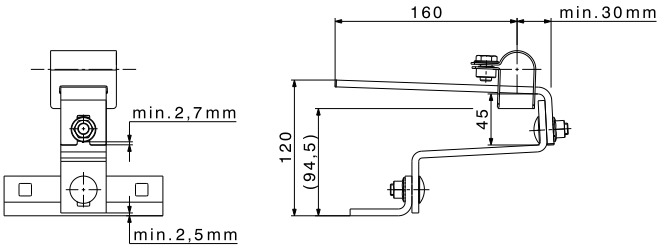


**Figure 06**

**Roof bar - Germany**

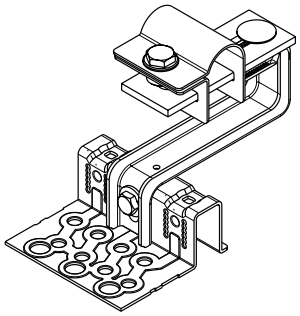

**Max. roof bar adjustment dimensions**

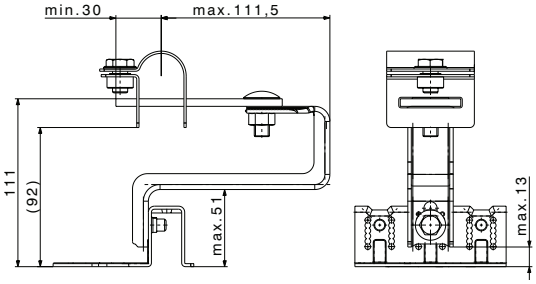


**Min. roof bar adjustment dimensions**

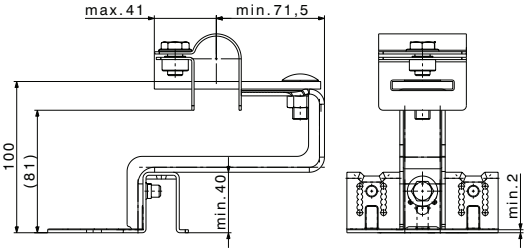


**Figure 07**

## 3.3 Installation of the holder tube section

**Installation of "lower" holder tube section**

5. Guide the **lower** holder tube section (7, Figure 09) into the pipe clips (8, 9).

> ⓘ **The upper/lower holder tube sections are the same, without any differences between them.**

6. Set the desired distance between the holder tube section and the end of the roof at the left or right (gable end).
7. Set the groove of the holder tube section at right angles to the roof pitch (Figure 08).

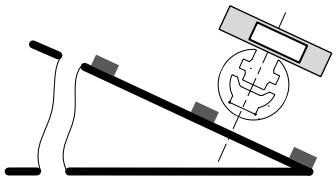

**Figure 08**

> ⓘ **The holder tube section must be aligned at right angles to the roof surface, as otherwise, it will be very difficult or even impossible to move the collector (Figure 08).**

8. Tighten the hex screw (10) of the pipe clip.

**Installation of "upper" holder tube section**

9. Install the **upper** holder tube section (Figure 09) as described in steps 5, 6, 7.

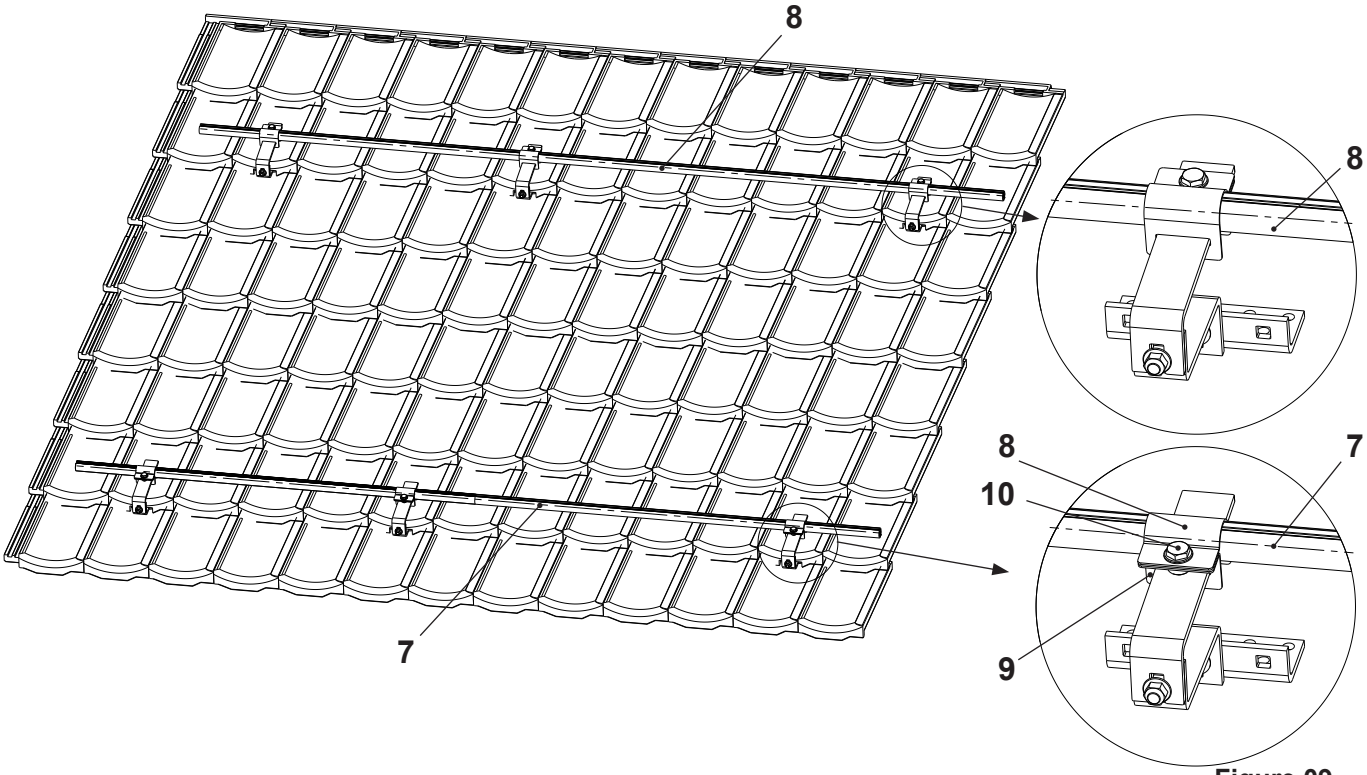


**Figure 09**

# 4. Preparing collectors for installation

**Be careful: hot surfaces.**
**The surface of the collector can become very hot when exposed to bright sunlight.**

## 4.1 Collector breather

| | |
|---|---|
| = | The breather (Figure 10, Figure 11) must always be positioned on the short side of the manifold pipe! |
| = | To guarantee correct through-flow, also always position the dummy plug (Figure 10, Figure 11) on the short side of the manifold pipe! |
| = | Flow |
| = | Type label |

**Connection variant: Tichelmann**

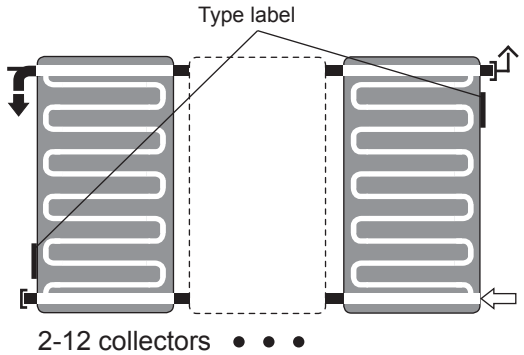


Figure 10

**Connection variant: Not Tichelmann:**

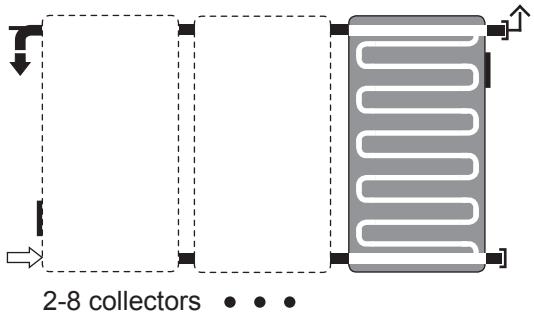


Figure 11

## 4.2 Install the locking pin at the bottom of the collector

**The mounting position depends on the collector alignment, see „4.1 Collector breather“**

10. Remove the protective cardboard from the collector
11. Install the locking pins (L) on the left and right of the collector using hexagon socket screws (K) as shown in the drawing (Figure 12).

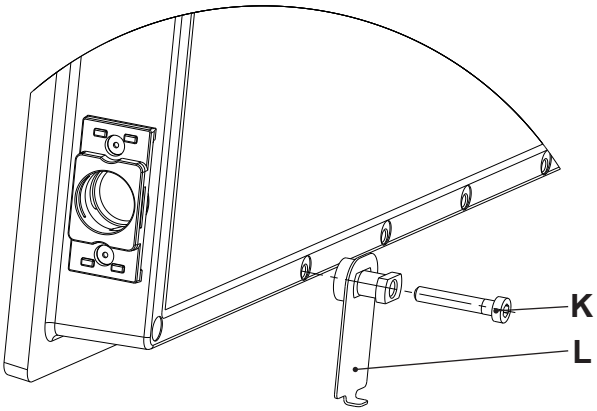


Figure 12

**Make sure the locking pin does not collide with the roof bracket (Fig. 13), if necessary the locking pins can be moved on the collector (hole spacing 80 mm).**

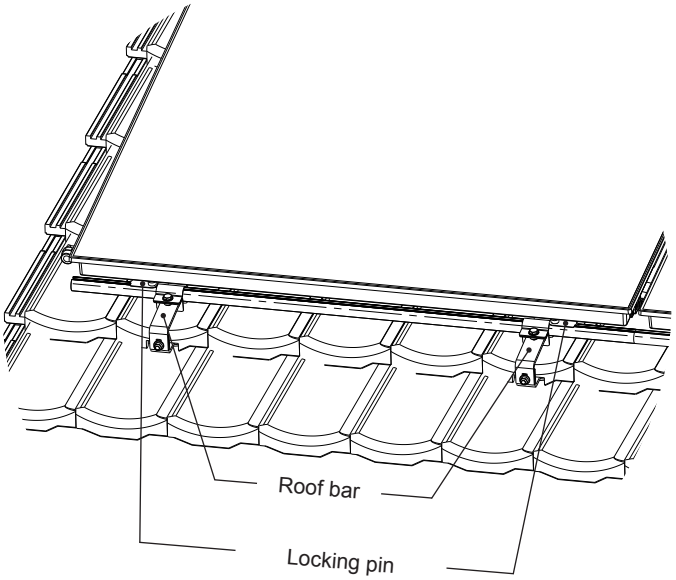


Figure 13

# 5. Installing the collector

## 5.1 Collector 1

**Be careful: hot surfaces.**
**The surface of the collector can become very hot when exposed to bright sunlight.**
**Wear safety gloves**

12. Guide the collector with the locking pin (1, Detail A, cross-section B, Figure 14) at right angles into the lower holder tube section (groove).
    - The ends of the upper and lower holder tube sections must be flush with the outside edge of the collector!

13. Lock the collector in place by turning the sheet metal of the locking pin (1, Detail A) by 90° to the left or right.

Figure 14

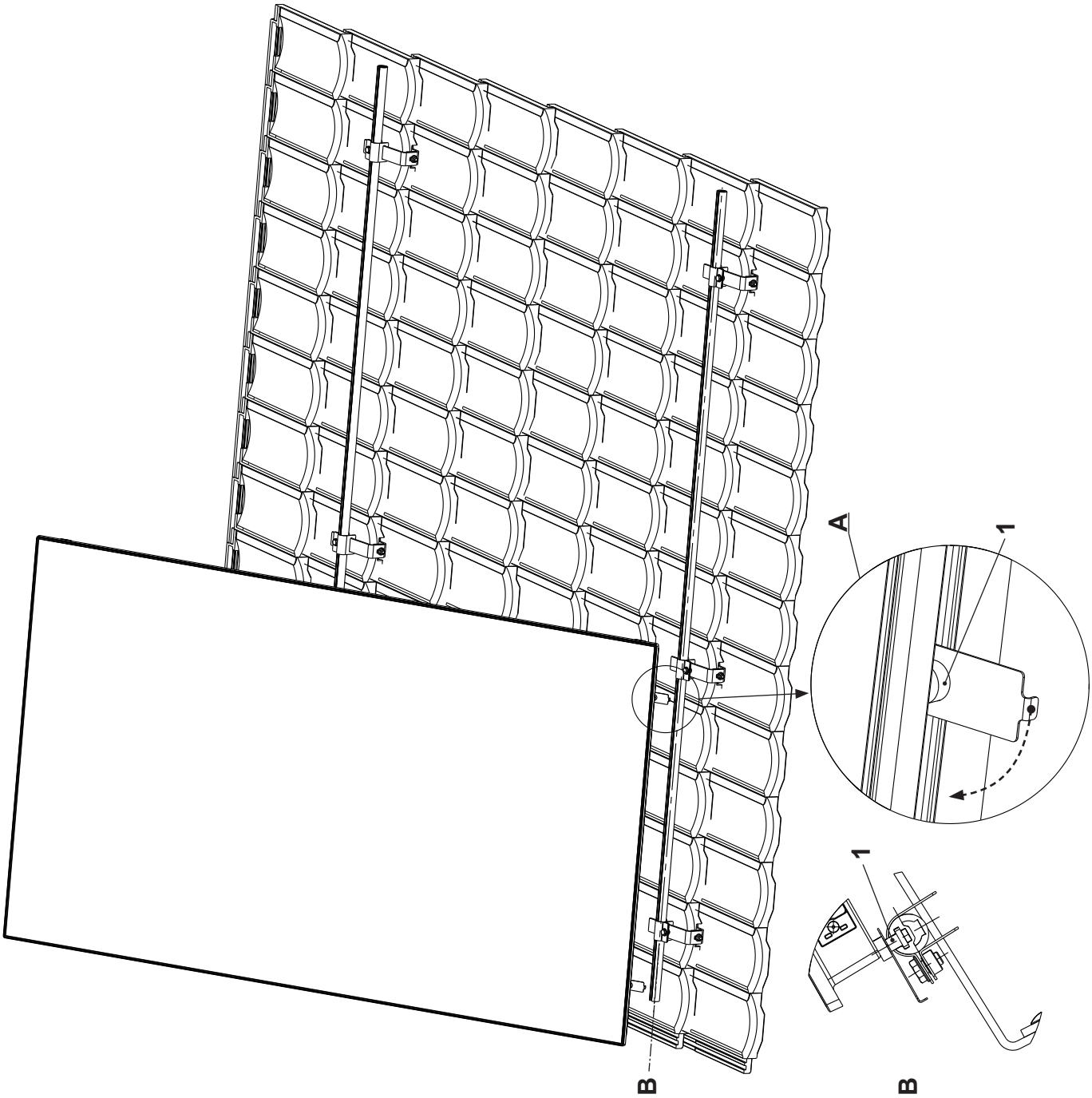

## 5.2 Collector 2

14. Fit the clamping element end section (1, Detail A, Figure 15)
    - The clamping element end section can be mounted on the left or right!

15. Mount the hydraulic connectors on collector 1.
    - Lubricate the O-rings of the hydraulic connectors (2, Detail B) with the silicone grease supplied; see Point „1.2 Connections“

    - Guide the two hydraulic connectors into the hydraulic connection of the first collector at the bottom and top and secure with a spring clip (3, Detail B).

16. Fit collector 2 into the lower holder tube section (Detail C, cross-section D) as described in step 12

17. Slide collector 2 carefully into the hydraulic connectors of the first collector!

Figure 15

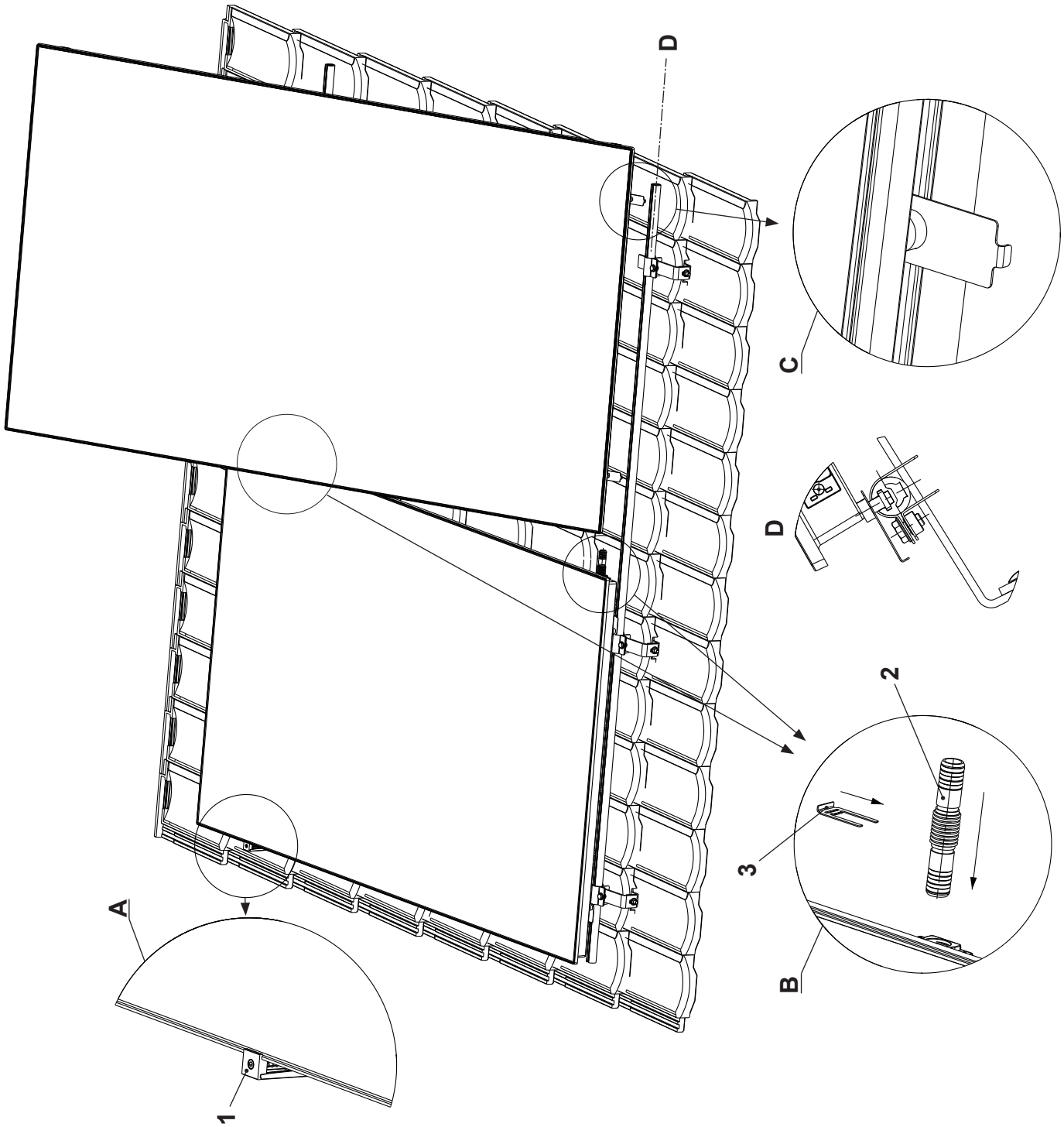

18. Install the clamping element in the middle (1, detail A, Figure 18).
    - When doing this, align the bottom of the collector with the same spacing as the "clamping element upper middle".

19. Lock the collector in position as described in "Point 13 Locking."

20. Install the clamping element end section (2, detail B).

## 5.3 Collector 3 and further collectors

21. If you are installing more than 2 collectors, install collector 3 and any further collectors as described in Point 5.2

**Installation of "lower" holder tube section (extension)**

> **With an *odd* number of collectors, a short holder tube section (1230 mm) is added in each case, and with an *even* number of collectors, a long holder tube section (2475 mm) is added in each case.**

22. Guide the extension (1, Figure 16) into the pipe clip (2, 3, detail A) and connect it to the long holder tube section (4) using the plug connection (5, detail B).

23. Tighten the fastening bolt (6, detail A).

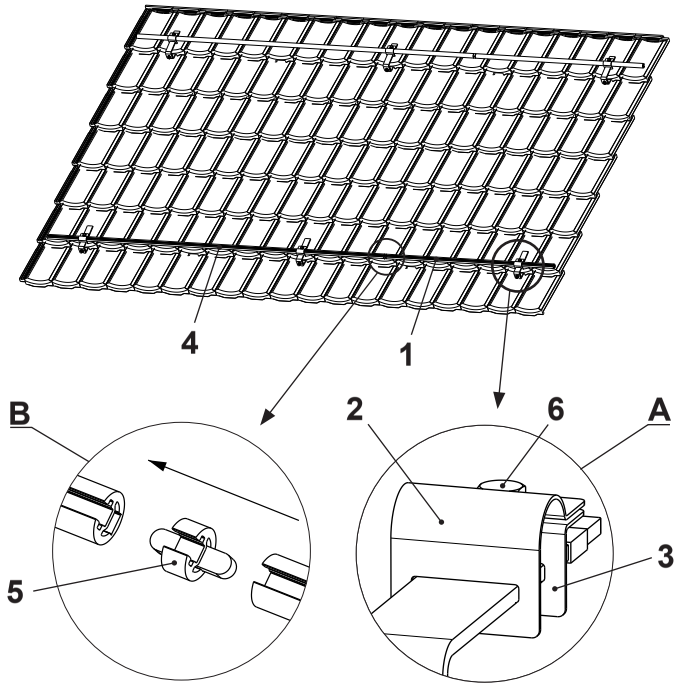


Figure 16

**Installation of "upper" holder tube section (extension)**

24. Install the **upper** holder tube section (8, Figure 17) as described in steps 19 and 20

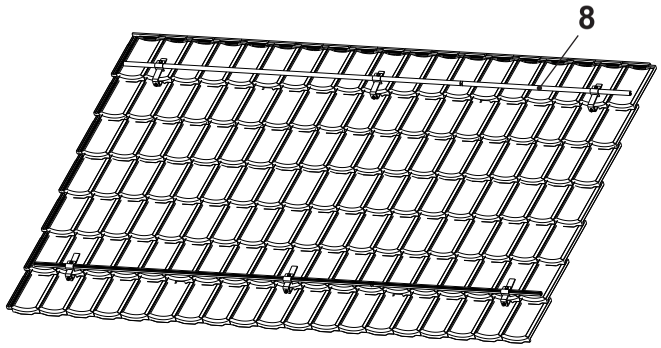


Figure 17

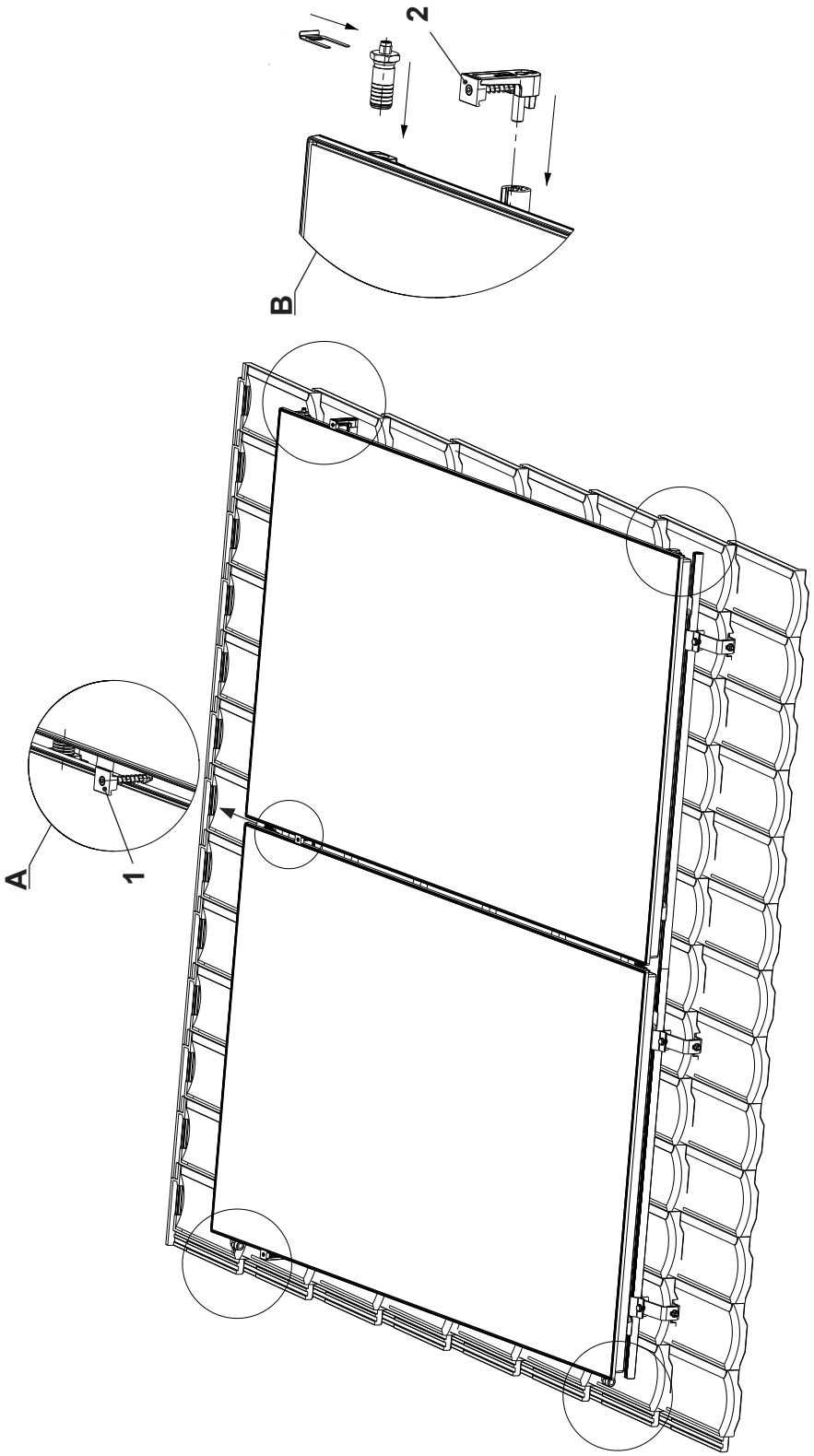


Figure 18

# 6. Install hydraulic screw connections on the collector.

25. Lubricate the O-rings of the hydraulic screw connections (3, detail B, C, D, E, Figure 19) with the silicone grease supplied; see Point "1.2 Connections"

26. Guide the hydraulic screw connections into the hydraulic connections on the collector and secure each with a spring clip (4).

## 6.1 Hydraulic connection example

| | | |
|---|---|---|
| **B** | | Dummy plug with integrated manual vent |
| **C** | | Dummy plug |
| **D** | | Line to collector field (collector return) |
| **E** | | Line from collector field (collector flow, warm) select short line routing |
| | For further information, see the installation instructions, example system «Hydraulic integration,» Point 7.1. | |

## 6.2 Collector ventilation

Each of the four hydraulic connections (1, holder) on the collector has indirect ventilation. For this reason, keep the marked area (2) free from:

- Insulation material
- and other materials

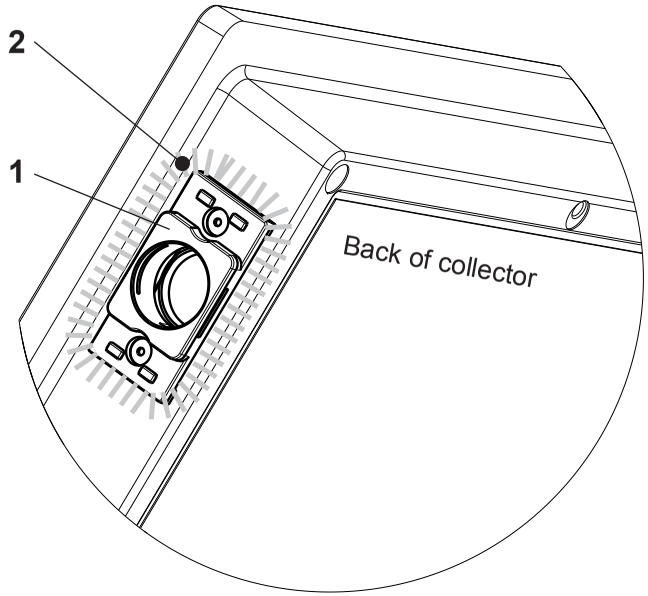

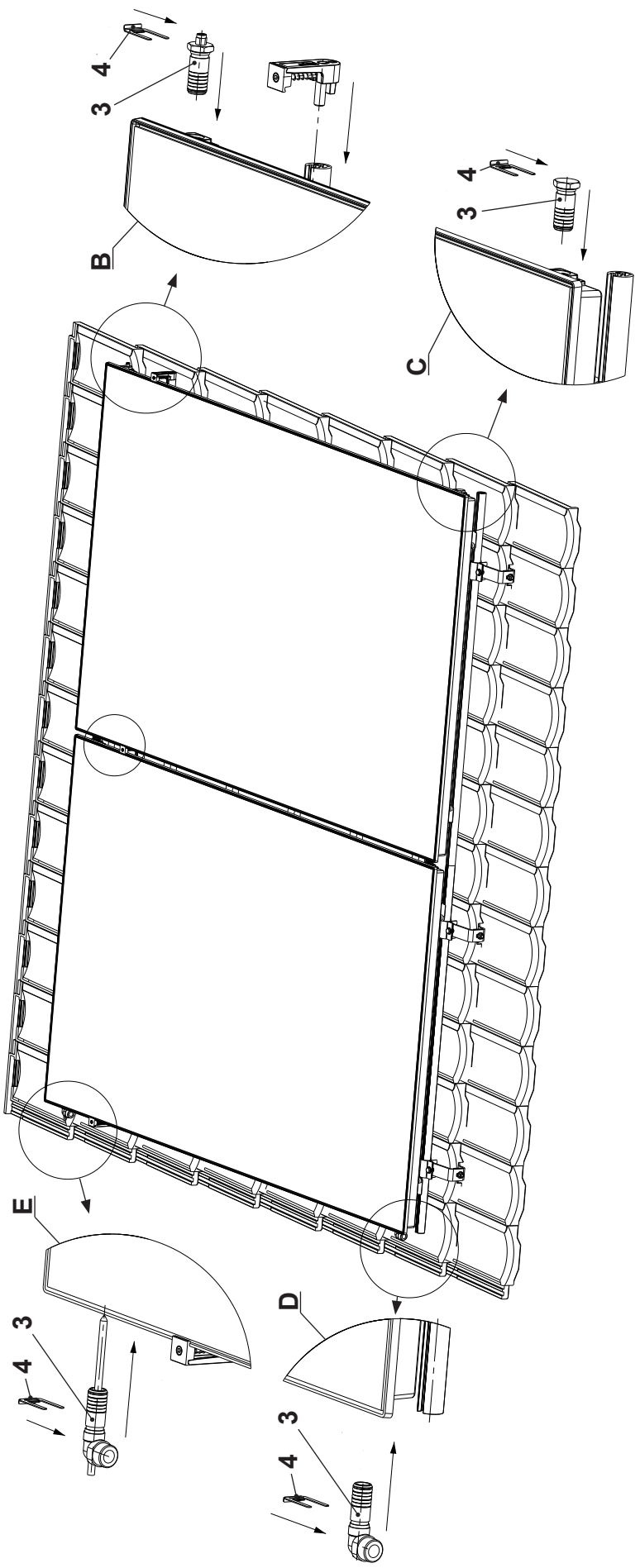


Figure 19

## United Kingdom

**Hoval Ltd.**
Northgate
Newark
Nottinghamshire NG24 1JN
Phone +44 1636 67 27 11
Fax +44 1636 67 35 32
www.hoval.co.uk

## Principality of Liechtenstein

**Hoval Aktiengesellschaft**
Austrasse 70
9490 Vaduz
Phone +423 399 24 00
Fax +423 399 24 11
www.hoval.com

## Switzerland

**Hoval AG**
General Wille-Strasse 201
CH-8706 Feldmeilen
Phone +41 44 925 61 11
Fax +41 44 923 11 39
www.hoval.ch

## Germany

**Hoval GmbH**
Humboldtstrasse 30
D-85609 Aschheim-Dornach
Phone +49 89 92 20 97-0
Fax +49 89 92 20 97-77
www.hoval.de

## Austria

**Hoval Gesellschaft mbH**
Hovalstrasse 11
A-4614 Marchtrenk
Phone +43 50 365 - 0
Fax +43 50 365 - 5005
www.hoval.at

## Italy

**Hoval s.r.l.**
Via per Azzano San Paolo, 26/28
I-24050 Grassobbio (BG)
Phone +39 035 52 50 69
Fax +39 035 52 69.59
www.hoval.it

## France

**Hoval SAS**
6, rue des Bouleaux
F-67100 Strasbourg
Phone +33 3 88 60 39 52
Fax +33 3 88 60 53 24
www.hoval.fr